REV	DATE	PAGES	DESCRIPTION
A	11 / 12 / 2017	All	Initial

PAGE	DESCRIPTION	PAGE	DESCRIPTION
1	Title, Notes, Rev. History	39	Clock 2
2	Block Diagram	40	I2C and PMBUS
3	Power Tree	41	LEDs and PushButtons
4	Power Sequence Timing	42	LEDs for QSFPDD
5	Clock Tree Diagram	43	MAX10 - USB Blaster II -1
6	I2C Diagram	44	MAX10 - USB Blaster II -2
7	JTAG Diagram	45	BLANK
8	DDR4_DDR4 Pin Map	46	MAX10 Power Control -1
9	DDR4/DDRT Single DIMM CH0	47	MAX10 Power Control -2
10	FPGA BANK 3A	48	Power inputs
11	FPGA BANK 3B	49	PWR 12V to 5V
12	DDR4 Single DIMM CH1	50	PWR 12V to 3.3V
13	FPGA BANK 3C	51	PWR VCC - 1
14	FPGA BANK 3D	52	PWR VCC - 2
15	DDR4/DDRT Single DIMM CH2	53	PWR VCC - 3
16	FPGA BANK 2A	54	PWR 1p8V
17	FPGA BANK 2B	55	PWR - 0p8V_VCCL_SDM
18	DDR4/DDRT Single DIMM CH3	56	PWR - 0p8V_VCCL_HPS
19	FPGA BANK 2C	57	PWR - IO_1p8V
20	FPGA BANK 2D	58	PWR - VCC_HSSI
21	FPGA BANK 9A	59	PWR - 1p2V_VCCR
22	FPGA BANK 10A	60	PWR - 1p2V_DDR4_CH01
23	QSFPDD0	61	PWR - 1p2V_DDR4_CH23
24	QSFPDD1	62	PWR - 0p6V_VTT/VREF
25	PCIe End Point Edge Connector	63	PWR - 2p5V
26	FPGA Config SDM	64	PWR - 1p1V_VCCH_GXER1
27	FPGA BANK HPS	65	PWR - Decouping Caps 1
28	ETH PHY	66	PWR - Decouping Caps 2
29	UART		
30	Micro SD		
31	eMMC		
32	FPGA BANK NC DNU		
33	FPGA Power 1		
34	FPGA Power 2		
35	FPGA Gnd 1		
36	FPGA Gnd 2		
37	FPGA Gnd 3		
38	Clock 1		

Board BOM : K80290 Rev01

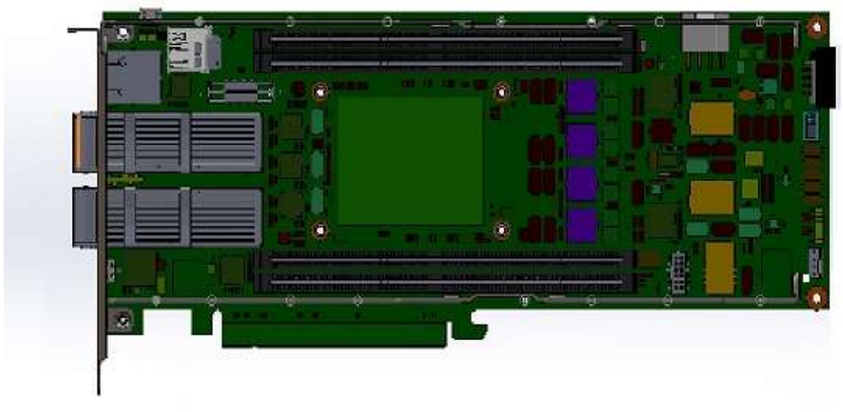

Intel Corporation,101 innovation Dr, San Jose, CA 95134

Title **AgileX F-Series FPGA Dev Kit_Enpirion**

Copyright (c) 2014, Intel Corporation. All Rights Reserved.

Size	Document Number	Rev
B	K57065-001-A	A0

Date: Thursday, May 07, 2020 Sheet 1 of 66

System Block Diagram

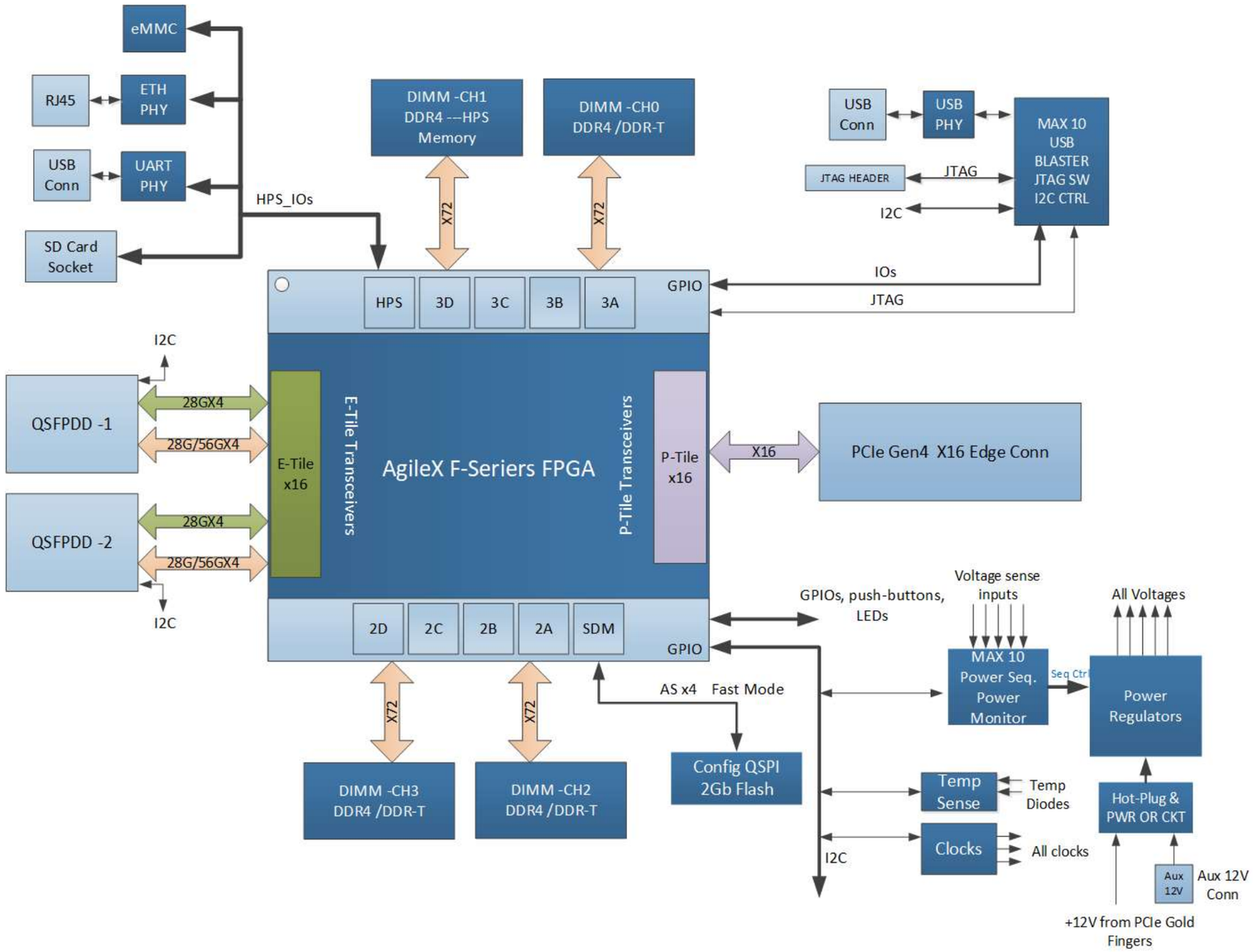

Intel Corporation,101 innovation Dr, San Jose, CA 95134	
Title	AgileX F-Series FPGA Dev Kit_Enpirion
	Copyright (c) 2014, Intel Corporation. All Rights Reserved.
Size B	Document Number K57065-001-A — Rev A0
Date: Friday, January 10, 2020	Sheet 2 of 66

AgileX FPGA DEVKIT POWER TREE

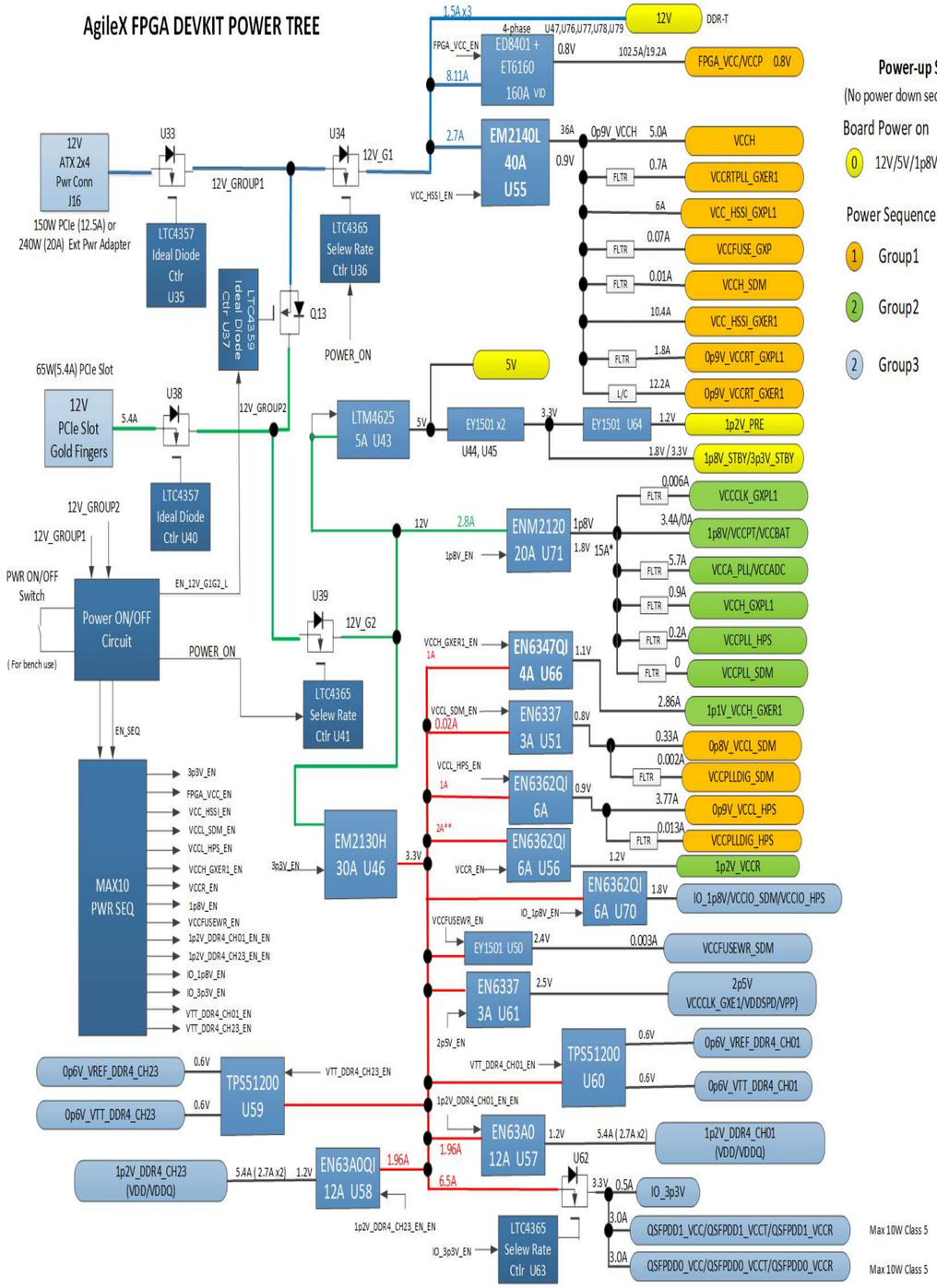

Power-up Sequence:

(No power down sequence requirment)

Board Power on

0 12V/5V/1p8V_STBY/3p3V_STBY/1p2V_PRE

Power Sequence Start

1 Group1

2 Group2

2 Group3

Intel Corporation,101 innovation Dr, San Jose, CA 95134

Title **AgileX F-Series FPGA Dev Kit_Enpirion**

Copyright (c) 2014, Intel Corporation. All Rights Reserved.

Size	Document Number	Rev
B	K57065-001-A	A0

Date: Friday, January 10, 2020 Sheet 3 of 66

Power Sequence Timing

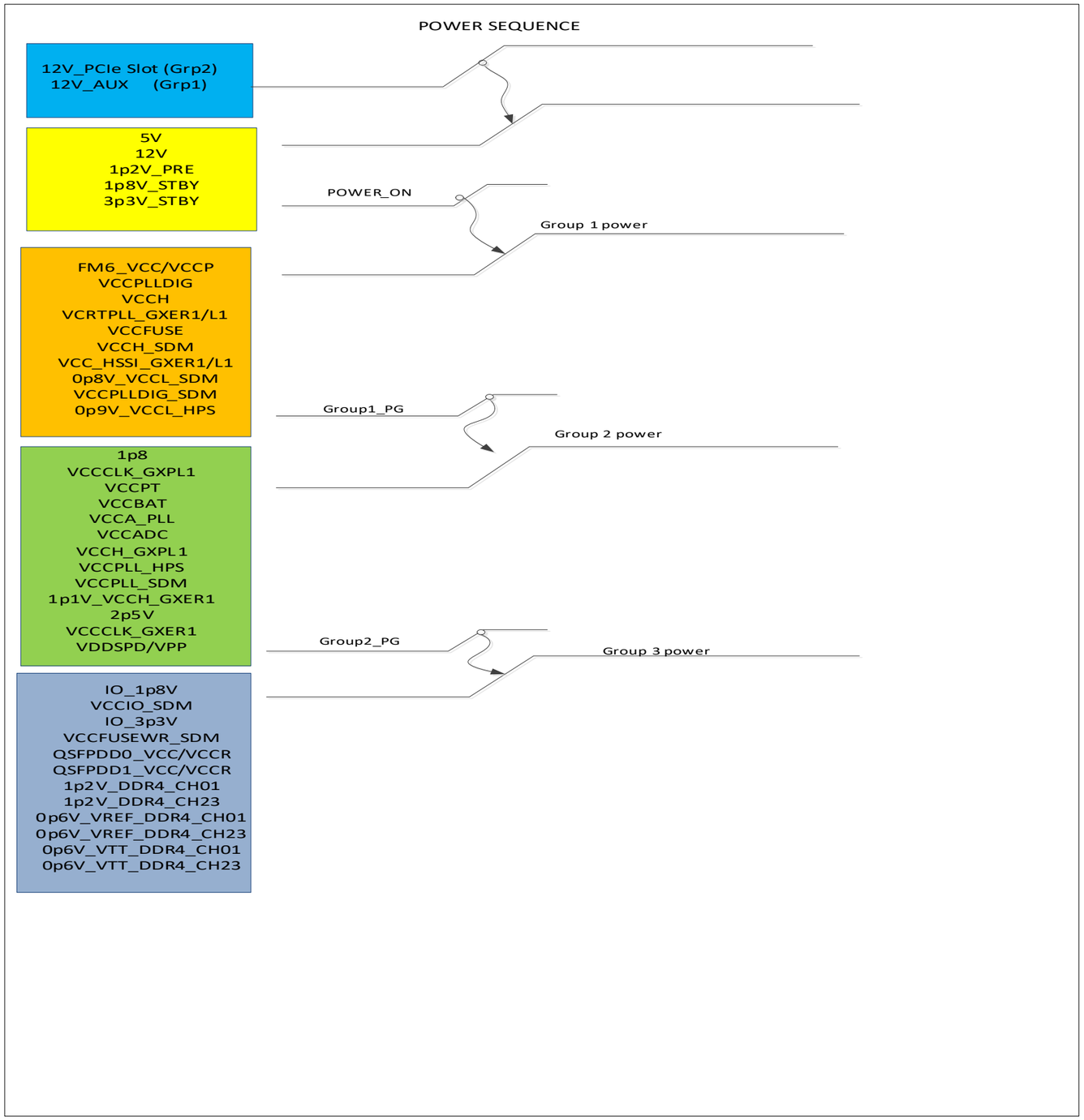

Intel Corporation,101 innovation Dr, San Jose, CA 95134

Title: AgileX F-Series FPGA Dev Kit_Enpirion

Copyright (c) 2014, Intel Corporation. All Rights Reserved.

Size	Document Number	Rev
B	K57065-001-A	A0

Date: Friday, January 10, 2020 Sheet 4 of 66

Clock Tree

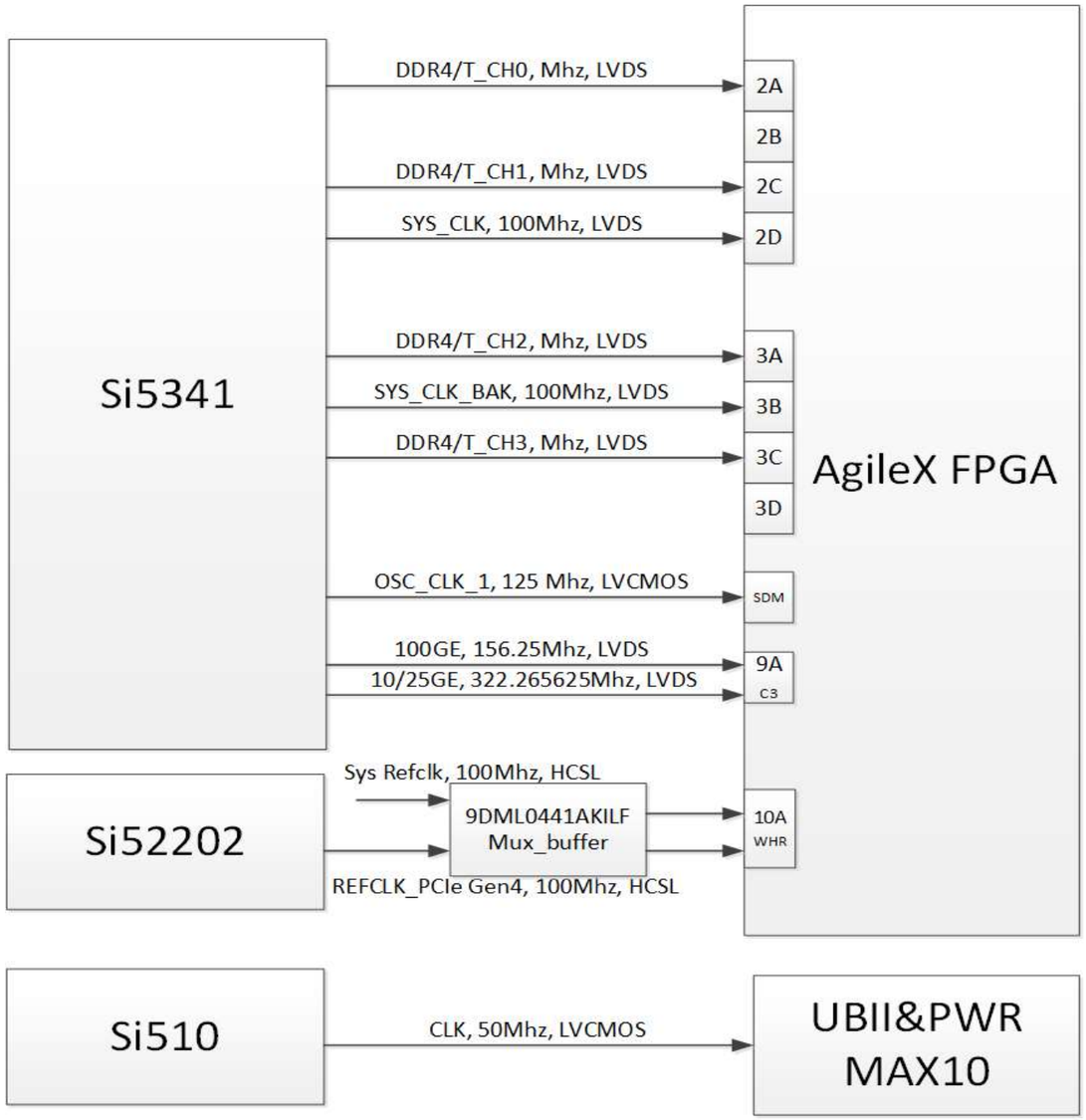

Intel Corporation,101 innovation Dr, San Jose, CA 95134

Title: AgileX F-Series FPGA Dev Kit_Enpirion

Copyright (c) 2014, Intel Corporation. All Rights Reserved.

Size	Document Number	Rev
B	K57065-001-A	A0

Date: Friday, January 10, 2020 Sheet 5 of 66

I2C Diagram

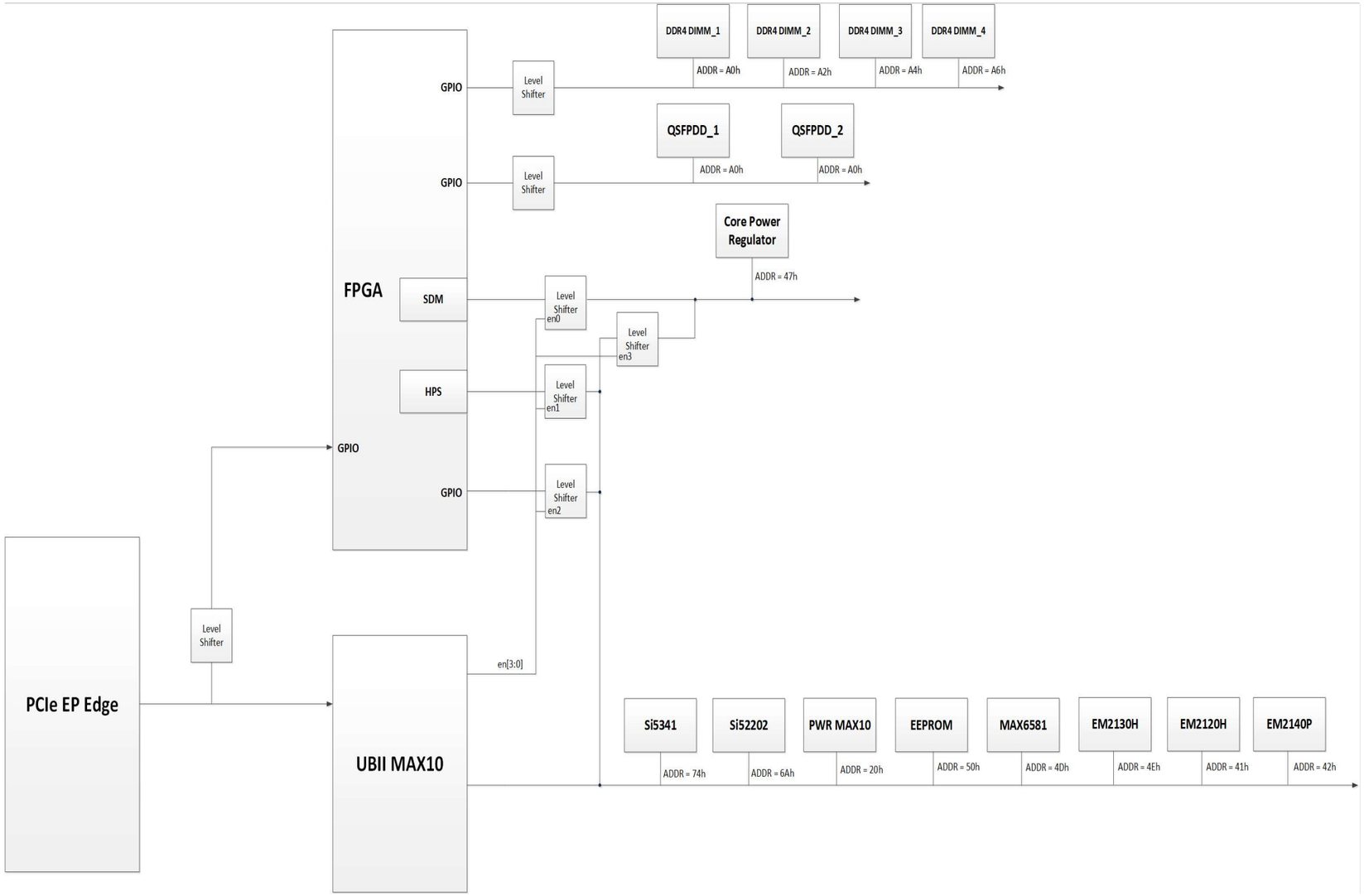

Intel Corporation,101 innovation Dr, San Jose, CA 95134

Title: AgileX F-Series FPGA Dev Kit_Enpirion

Copyright (c) 2014, Intel Corporation. All Rights Reserved.

Size	Document Number	Rev
B	K57065-001-A	A0

Date: Friday, January 10, 2020 Sheet 6 of 66

JTAG Block Diagrram

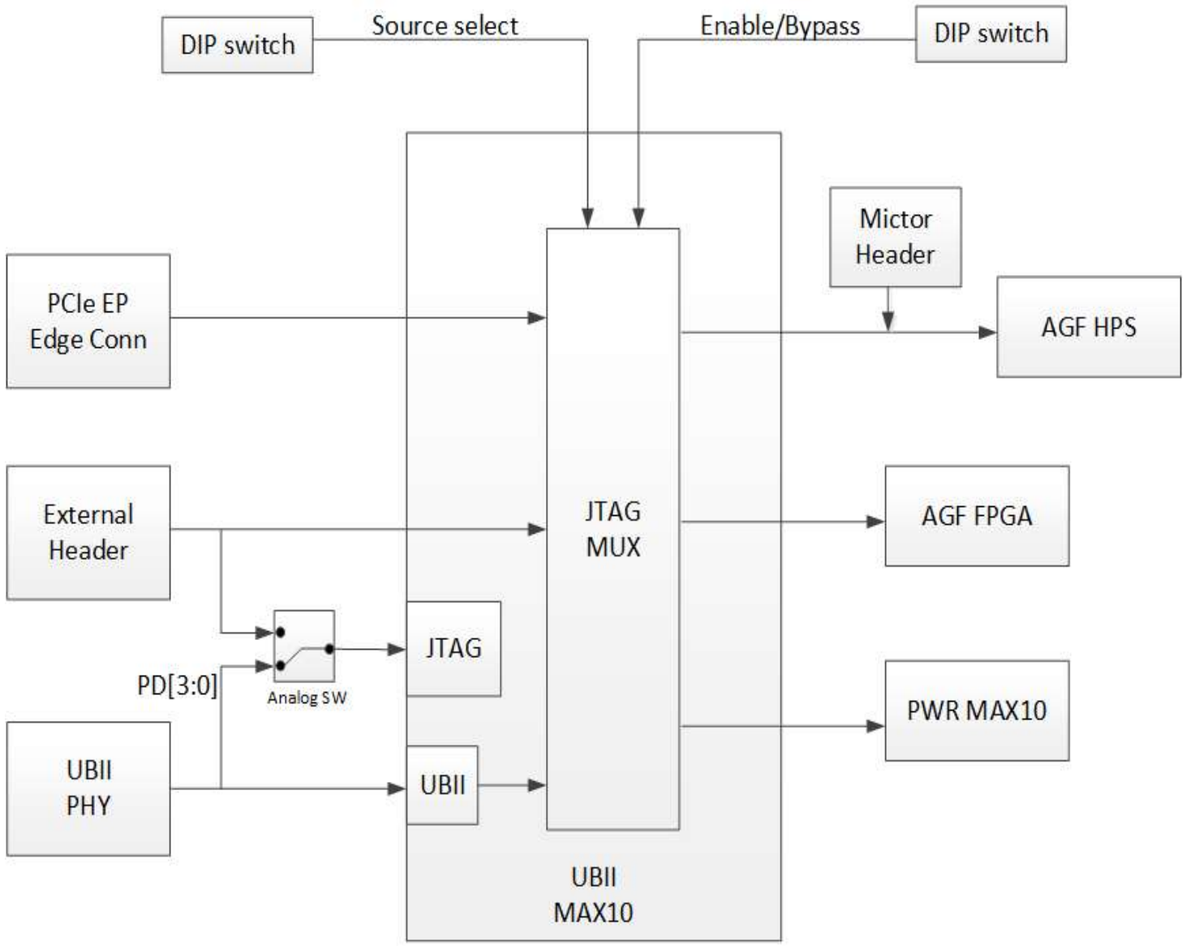

Intel Corporation,101 innovation Dr, San Jose, CA 95134

Title: **AgileX F-Series FPGA Dev Kit_Enpirion**

Copyright (c) 2014, Intel Corporation. All Rights Reserved.

Size	Document Number	Rev
B	K57065-001-A	A0

Date: Friday, January 10, 2020 Sheet 7 of 66

DDR4/DDR-T DIMM Pin Map

Pin #	Front Side	Pin #	Back Side	Pin #	Front Side	Pin #	Back Side	Pin #	Front Side	Pin #	Back Side	Pin #	Front Side	Pin #	Back Side
1	12V	145	12V	38	DQ24	182	VSS	75	CLK0#	219	CLK1#	108	DQ40	252	VSS
2	VSS	146	VREFCA	39	VSS	183	DQ25	76	VDD	220	VDD	109	VSS	253	DQ41
3	DQ4	147	VSS	40	DQS12	184	VSS	77	VTT	221	VTT	110	DQS14	254	VSS
4	VSS	148	DQ5	41	DQS12#	185	DQS3#					111	DQS14#	255	DQS5#
5	DQ0	149	VSS	42	VSS	186	DQS3		KEY			112	VSS	256	DQS5
6	VSS	150	DQ1	43	DQ30	187	VSS					113	DQ46	257	VSS
7	DQS0	151	VSS	44	VSS	188	DQ31					114	VSS	258	DQ47
8	DQS0#	152	DQS0#	45	DQ26	189	VSS	78	EVENT	222	PARITY	115	DQ42	259	VSS
9	VSS	153	DQS0	46	VSS	190	DQ27	79	A0	223	VDD	116	VSS	260	DQ43
10	DQ6	154	VSS	47	CB4	191	VSS	80	VDD	224	BA1	117	DQ52	261	VSS
11	VSS	155	DQ7	48	VSS	192	CB5	81	BA0	225	A10	118	VSS	262	DQ53
12	DQ2	156	VSS	49	CB0	193	VSS	82	RAS#/A16	226	VDD	119	DQ48	263	VSS
13	VSS	157	DQ3	50	VSS	194	CB1	83	VDD	227	RFU	120	VSS	264	DQ49
14	DQ12	158	VSS	51	DQS17	195	VSS	84	CS0#	228	WE#/A14	121	DQS15	265	VSS
15	VSS	159	DQ13	52	DQS17#	196	DQS8#	85	VDD	229	VDD	122	DQS15#	266	DQS6#
16	DQ8	160	VSS	53	VSS	197	DQS8	86	CAS#/A15	230	SAVE#	123	VSS	267	DQS6
17	VSS	161	DQ9	54	CB6	198	VSS	87	ODT0	231	VDD	124	DQ54	268	VSS
18	DQS10	162	VSS	55	VSS	199	CB7	88	VDD	232	A13	125	VSS	269	DQ55
19	DQS10#	163	DQS1#	56	CB2	200	VSS	89	CS1#	233	VDD	126	DQ50	270	VSS
20	VSS	164	DQS1	57	VSS	201	CB3	90	VDD	234	A17	127	VSS	271	DQ51
21	DQ14	165	VSS	58	RESET#	202	VSS	91	ODT1	235	C2	128	DQ60	272	VSS
22	VSS	166	DQ15	59	VDD	203	CKE1	92	VDD	236	VDD	129	VSS	273	DQ61
23	DQ10	167	VSS	60	CKE0	204	VDD	93	C0	237	C1	130	DQ56	274	VSS
24	VSS	168	DQ11	61	VDD	205	RFU	94	VSS	238	SA2	131	VSS	275	DQ57
25	DQ20	169	VSS	62	ACT#	206	VDD	95	DQ36	239	VSS	132	DQS16	276	VSS
26	VSS	170	DQ21	63	BG0	207	BG1	96	VSS	240	DQ37	133	DQS16#	277	DQS7#
27	DQ16	171	VSS	64	VDD	208	ALERT#	97	DQ32	241	VSS	134	VSS	278	DQS7
28	VSS	172	DQ17	65	A12	209	VDD	98	VSS	242	DQ33	135	DQ62	279	VSS
29	DQS11	173	VSS	66	A9	210	A11	99	DQS13	243	VSS	136	VSS	280	DQ63
30	DQS11#	174	DQS2#	67	VDD	211	A7	100	DQS13#	244	DQS4#	137	DQ58	281	VSS
31	VSS	175	DQS2	68	A8	212	VDD	101	VSS	245	DQS4	138	VSS	282	DQ59
32	DQ22	176	VSS	69	A6	213	A5	102	DQ38	246	VSS	139	SA0	283	VSS
33	VSS	177	DQ23	70	VDD	214	A4	103	VSS	247	DQ39	140	SA1	284	VDDSPD
34	DQ18	178	VSS	71	A3	215	VDD	104	DQ34	248	VSS	141	SCL	285	SDA
35	VSS	179	DQ19	72	A1	216	A2	105	VSS	249	DQ35	142	VPP	286	VPP
36	DQ28	180	VSS	73	VDD	217	VDD	106	DQ44	250	VSS	143	VPP	287	VPP
37	VSS	181	DQ29	74	CLK0	218	CLK1	107	VSS	251	DQ45	144	RFU	288	VPP

DDR-T DIMM Pin Map is Identical to standard DDR4 DIMM Pin Map except the DDR-T protocol repurposes five of these pins:

CS1# (pin 89) : Grant, GNT# <0> Input

CKE1 (pin 203) : Request, REQ# <0> Output

ODT1 (pin 91) : Error, ERR# Output

CLK1 (pin 218):Early Read ID, ERID<0> Output

CLK1# (pin 219):Early Read ID, ERID<1> Output

Intel Corporation,101 innovation Dr, San Jose, CA 95134

Title: AgileX F-Series FPGA Dev Kit_Enpirion

Copyright (c) 2014, Intel Corporation. All Rights Reserved.

Size: B | Document Number: K57065-001-A | Rev: A0

Date: Friday, January 10, 2020 | Sheet 8 of 66

DDR4/DDRT Single DIMM CH0

x72bit DIMM Only

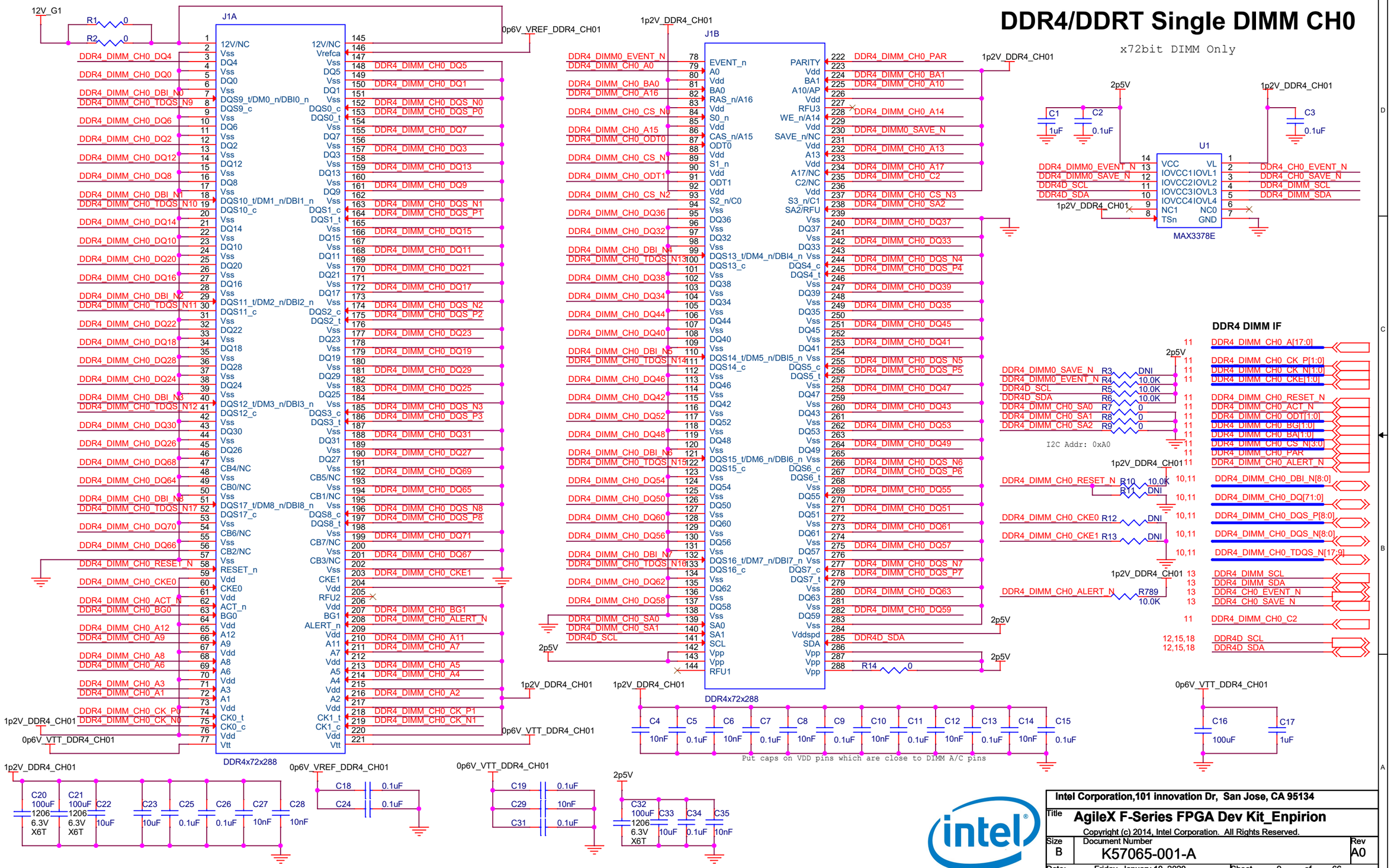

Intel Corporation,101 innovation Dr, San Jose, CA 95134

Title: AgileX F-Series FPGA Dev Kit_Enpirion

Copyright (c) 2014, Intel Corporation. All Rights Reserved.

Size: B | Document Number: K57065-001-A | Rev: A0

Date: Friday, January 10, 2020 | Sheet 9 of 66

DDR4/T CH0 INTERFACE -- FPGA SIDE 3A

U2I

DDR4_DIMM_CH0_DQ63	V59	IO, LVDS3A_25N, DQ60
DDR4_DIMM_CH0_DQ61	T59	IO, LVDS3A_25P, DQ60
DDR4_DIMM_CH0_DQ60	W58	IO, LVDS3A_26N, DQ60
DDR4_DIMM_CH0_DQ62	U58	IO, LVDS3A_26P, DQ60
DDR4_DIMM_CH0_TDQS_N16	V57	IO, LVDS3A_27N, DQ60
DDR4_DIMM_CH0_DBI_N7	T57	IO, LVDS3A_27P, DQ60
DDR4_DIMM_CH0_DQS_N7	W56	IO, LVDS3A_28N, DQSN60
DDR4_DIMM_CH0_DQS_P7	U56	IO, LVDS3A_28P, DQS60
DDR4_DIMM_CH0_DQ56	V55	IO, LVDS3A_29N, DQ60
DDR4_DIMM_CH0_DQ57	T55	IO, LVDS3A_29P, DQ60
DDR4_DIMM_CH0_DQ58	W54	IO, LVDS3A_30N, DQ60
DDR4_DIMM_CH0_DQ59	U54	IO, LVDS3A_30P, DQ60
	P59	IO, LVDS3A_31N, DQ61
	M59	IO, LVDS3A_31P, DQ61
	N58	IO, LVDS3A_32N, DQ61
	L58	IO, LVDS3A_32P, DQ61
	P57	IO, LVDS3A_33N, DQ61
	M57	IO, LVDS3A_33P, DQ61
	N56	IO, PLL_3A_B_CLKOUT1N, LVDS3A_34N, DQSN61
	L56	IO, PLL_3A_B_CLKOUT1P, PLL_3A_B_CLKOUT1, PLL_3A_B_FB1, LVDS3A_34P, DQS61
	P55	IO, LVDS3A_35N, DQ61
	M55	IO, RZQ_B_3A, LVDS3A_35P, DQ61
	N54	IO, CLK_B_3A_1N, LVDS3A_36N, DQ61
	L54	IO, CLK_B_3A_1P, LVDS3A_36P, DQ61
	W52	IO, CLK_B_3A_0N, LVDS3A_37N, DQ62
	U52	IO, CLK_B_3A_0P, LVDS3A_37P, DQ62
	V51	IO, LVDS3A_38N, DQ62
	T51	IO, LVDS3A_38P, DQ62
	W50	IO, PLL_3A_B_CLKOUT0N, LVDS3A_39N, DQ62
	U50	IO, PLL_3A_B_CLKOUT0P, PLL_3A_B_CLKOUT0, PLL_3A_B_FB0, LVDS3A_39P, DQ62
	V49	IO, LVDS3A_40N, DQSN62
	T49	IO, LVDS3A_40P, DQS62
	W48	IO, LVDS3A_41N, DQ62
	U48	IO, LVDS3A_41P, DQ62
	V47	IO, LVDS3A_42N, DQ62
	T47	IO, LVDS3A_42P, DQ62
	N52	IO, LVDS3A_43N, DQ63
	L52	IO, LVDS3A_43P, DQ63
	P51	IO, LVDS3A_44N, DQ63
	M51	IO, LVDS3A_44P, DQ63
	N50	IO, LVDS3A_45N, DQ63
	L50	IO, LVDS3A_45P, DQ63
	P49	IO, LVDS3A_46N, DQSN63
	M49	IO, LVDS3A_46P, DQS63
	N48	IO, LVDS3A_47N, DQ63
	L48	IO, LVDS3A_47P, DQ63
	P47	IO, LVDS3A_48N, DQ63
	M47	IO, LVDS3A_48P, DQ63

		IO, LVDS3A_1N, DQ56
		IO, LVDS3A_1P, DQ56
		IO, LVDS3A_2N, DQ56
		IO, LVDS3A_2P, DQ56
		IO, LVDS3A_3N, DQ56
		IO, LVDS3A_3P, DQ56, AVST_READY
		IO, LVDS3A_4N, DQSN56, SDM_MISSION_DATA31
		IO, LVDS3A_4P, DQS56, SDM_MISSION_DATA30
		IO, LVDS3A_5N, DQ56, SDM_MISSION_DATA29
		IO, LVDS3A_5P, DQ56, SDM_MISSION_DATA28
		IO, LVDS3A_6N, DQ56, SDM_MISSION_DATA27
		IO, LVDS3A_6P, DQ56, SDM_MISSION_DATA26
		IO, LVDS3A_7N, DQ57, SDM_MISSION_DATA25
		IO, LVDS3A_7P, DQ57, SDM_MISSION_DATA24
		IO, LVDS3A_8N, DQ57, SDM_MISSION_DATA23
		IO, LVDS3A_8P, DQ57, SDM_MISSION_DATA22
		IO, LVDS3A_9N, DQ57, SDM_MISSION_DATA21
		IO, LVDS3A_9P, DQ57, SDM_MISSION_DATA20
		IO, PLL_3A_T_CLKOUT1N, LVDS3A_10N, DQSN57, SDM_MISSION_DATA19
		IO, PLL_3A_T_CLKOUT1P, PLL_3A_T_CLKOUT1, PLL_3A_T_FB1, LVDS3A_10P, DQS57, SDM_MISSION_DATA18
		IO, LVDS3A_11N, DQ57, SDM_MISSION_DATA17
		IO, RZQ_T_3A, LVDS3A_11P, DQ57, SDM_MISSION_DATA16
		IO, CLK_T_3A_1N, LVDS3A_12N, DQ57
		IO, CLK_T_3A_1P, LVDS3A_12P, DQ57
		IO, CLK_T_3A_0N, LVDS3A_13N, DQ58
		IO, CLK_T_3A_0P, LVDS3A_13P, DQ58
		IO, LVDS3A_14N, DQ58
		IO, LVDS3A_14P, DQ58
		IO, PLL_3A_T_CLKOUT0N, LVDS3A_15N, DQ58
		IO, PLL_3A_T_CLKOUT0P, PLL_3A_T_CLKOUT0, PLL_3A_T_FB0, LVDS3A_15P, DQ58
		IO, LVDS3A_16N, DQSN58, SDM_MISSION_CLK
		IO, LVDS3A_16P, DQS58, SDM_MISSION_DATA15
		IO, LVDS3A_17N, DQ58, SDM_MISSION_DATA14
		IO, LVDS3A_17P, DQ58, SDM_MISSION_DATA13
		IO, LVDS3A_18N, DQ58, SDM_MISSION_DATA12
		IO, LVDS3A_18P, DQ58, SDM_MISSION_DATA11
		IO, LVDS3A_19N, DQ59, SDM_MISSION_DATA10
		IO, LVDS3A_19P, DQ59, SDM_MISSION_DATA9
		IO, LVDS3A_20N, DQ59, SDM_MISSION_DATA8
		IO, LVDS3A_20P, DQ59, SDM_MISSION_DATA_VALID
		IO, LVDS3A_21N, DQ59, SDM_MISSION_DATA7
		IO, LVDS3A_21P, DQ59, SDM_MISSION_DATA6
		IO, LVDS3A_22N, DQSN59, SDM_MISSION_DATA5
		IO, LVDS3A_22P, DQS59, SDM_MISSION_DATA4
		IO, LVDS3A_23N, DQ59, SDM_MISSION_DATA3
		IO, LVDS3A_23P, DQ59, SDM_MISSION_DATA2
		IO, LVDS3A_24N, DQ59, SDM_MISSION_DATA1
		IO, LVDS3A_24P, DQ59, SDM_MISSION_DATA0

H59	DDR4_DIMM_CH0_DQ47
F59	DDR4_DIMM_CH0_DQ45
J58	DDR4_DIMM_CH0_DQ44
G58	DDR4_DIMM_CH0_DQ46
H57	DDR4_DIMM_CH0_TDQS_N14
F57	DDR4_DIMM_CH0_DBI_N5
J56	DDR4_DIMM_CH0_DQS_N5
G56	DDR4_DIMM_CH0_DQS_P5
H55	DDR4_DIMM_CH0_DQ42
F55	DDR4_DIMM_CH0_DQ40
J54	DDR4_DIMM_CH0_DQ43
G54	DDR4_DIMM_CH0_DQ41
H61	DDR4_DIMM_CH0_DQ55
F61	DDR4_DIMM_CH0_DQ54
D59	DDR4_DIMM_CH0_DQ52
C58	DDR4_DIMM_CH0_DQ53
D57	DDR4_DIMM_CH0_TDQS_N15
B57	DDR4_DIMM_CH0_DBI_N6
C56	DDR4_DIMM_CH0_DQS_N6
A56	DDR4_DIMM_CH0_DQS_P6
D55	DDR4_DIMM_CH0_DQ50
B55	DDR4_DIMM_CH0_DQ48
C54	DDR4_DIMM_CH0_DQ51
A54	DDR4_DIMM_CH0_DQ49
J52	DDR4_DIMM_CH0_DQ39
G52	DDR4_DIMM_CH0_DQ38
H51	DDR4_DIMM_CH0_DQ37
F51	DDR4_DIMM_CH0_DQ36
J50	DDR4_DIMM_CH0_TDQS_N13
G50	DDR4_DIMM_CH0_DBI_N4
H49	DDR4_DIMM_CH0_DQS_N4
F49	DDR4_DIMM_CH0_DQS_P4
J48	DDR4_DIMM_CH0_DQ34
G48	DDR4_DIMM_CH0_DQ32
H47	DDR4_DIMM_CH0_DQ35
F47	DDR4_DIMM_CH0_DQ33
C52	DDR4_DIMM_CH0_DQ68
A52	DDR4_DIMM_CH0_DQ71
D51	DDR4_DIMM_CH0_DQ69
B51	DDR4_DIMM_CH0_DQ70
C50	DDR4_DIMM_CH0_TDQS_N17
A50	DDR4_DIMM_CH0_DBI_N8
D49	DDR4_DIMM_CH0_DQS_N8
B49	DDR4_DIMM_CH0_DQS_P8
C48	DDR4_DIMM_CH0_DQ66
A48	DDR4_DIMM_CH0_DQ64
D47	DDR4_DIMM_CH0_DQ67
B47	DDR4_DIMM_CH0_DQ65

BOT | TOP

Bank 3A

AGFB014R24_2486A

9,11	DDR4_DIMM_CH0_DBI_N[8:0]
9,11	DDR4_DIMM_CH0_DQ[71:0]
9,11	DDR4_DIMM_CH0_DQS_P[8:0]
9,11	DDR4_DIMM_CH0_DQS_N[8:0]
9,11	DDR4_DIMM_CH0_TDQS_N[17:9]

Intel Corporation,101 innovation Dr, San Jose, CA 95134

Title: AgileX F-Series FPGA Dev Kit_Enpirion

Copyright (c) 2014, Intel Corporation. All Rights Reserved.

Size: B | Document Number: K57065-001-A | Rev: A0

Date: Friday, January 10, 2020 | Sheet 10 of 66

DDR4/T CH1 INTERFACE -- FPGA SIDE 3B

U2H

DDRT:ERID2	DDR4_DIMM_CH0_CK_N1	V45	IO, LVDS3B_25N, DQ52	
DDRT:ERID0	DDR4_DIMM_CH0_CK_P1	T45	IO, LVDS3B_25P, DQ52	
		W44	IO, LVDS3B_26N, DQ52	
DDRT:NC	DDR4_DIMM_CH0_ALERT_N	U44	IO, LVDS3B_26P, DQ52	
		V43	IO, LVDS3B_27N, DQ52	
		T43	IO, LVDS3B_27P, DQ52	
		W42	IO, LVDS3B_28N, DQSN52	
		U42	IO, LVDS3B_28P, DQS52	
		V41	IO, LVDS3B_29N, DQ52	
DDRT:C3	DDR4_DIMM_CH0_C2	T41	IO, LVDS3B_29P, DQ52	
DDRT:C2	DDR4_DIMM_CH0_CS_N3	W40	IO, LVDS3B_30N, DQ52	
DDRT:C1	DDR4_DIMM_CH0_CS_N2	U40	IO, LVDS3B_30P, DQ52	
	DDR4_DIMM_CH0_BG0	P45	IO, LVDS3B_31N, DQ53	
	DDR4_DIMM_CH0_BA1	M45	IO, LVDS3B_31P, DQ53	
	DDR4_DIMM_CH0_BA0	N44	IO, LVDS3B_32N, DQ53	
	DDR4_DIMM_CH0_A17	L44	IO, LVDS3B_32P, DQ53	
	DDR4_DIMM_CH0_A16	P43	IO, LVDS3B_33N, DQ53	
	DDR4_DIMM_CH0_A15	M43	IO, LVDS3B_33P, DQ53	
	DDR4_DIMM_CH0_A14	N42	IO, PLL_3B_B_CLKOUT1N, LVDS3B_34N, DQSN53	
	DDR4_DIMM_CH0_A13	L42	IO, PLL_3B_B_CLKOUT1P, PLL_3B_B_CLKOUT1, PLL_3B_B_FB1, LVDS3B_34P, DQS53	
	DDR4_DIMM_CH0_A12	P41	IO, LVDS3B_35N, DQ53	
240 R15	DDR4_DIMM_CH0_RZQ	M41	IO, RZQ_B_3B, LVDS3B_35P, DQ53	
	CLK_DDR4_CH0_N 38	N40	IO, CLK_B_3B_1N, LVDS3B_36N, DQ53	
	CLK_DDR4_CH0_P 38	L40	IO, CLK_B_3B_1P, LVDS3B_36P, DQ53	
	DDR4_DIMM_CH0_A11	W38	IO, CLK_B_3B_0N, LVDS3B_37N, DQ54	
	DDR4_DIMM_CH0_A10	U38	IO, CLK_B_3B_0P, LVDS3B_37P, DQ54	
	DDR4_DIMM_CH0_A9	V37	IO, LVDS3B_38N, DQ54	
	DDR4_DIMM_CH0_A8	T37	IO, LVDS3B_38P, DQ54	
	DDR4_DIMM_CH0_A7	W36	IO, PLL_3B_B_CLKOUT0N, LVDS3B_39N, DQ54	
	DDR4_DIMM_CH0_A6	U36	IO, PLL_3B_B_CLKOUT0P, PLL_3B_B_CLKOUT0, PLL_3B_B_FB0, LVDS3B_39P, DQ54	
	DDR4_DIMM_CH0_A5	V35	IO, LVDS3B_40N, DQSN54	
	DDR4_DIMM_CH0_A4	T35	IO, LVDS3B_40P, DQS54	
	DDR4_DIMM_CH0_A3	W34	IO, LVDS3B_41N, DQ54	
	DDR4_DIMM_CH0_A2	U34	IO, LVDS3B_41P, DQ54	
	DDR4_DIMM_CH0_A1	V33	IO, LVDS3B_42N, DQ54	
	DDR4_DIMM_CH0_A0	T33	IO, LVDS3B_42P, DQ54	
	DDR4_DIMM_CH0_PAR	N38	IO, LVDS3B_43N, DQ55	
DDRT:GNT0	DDR4_DIMM_CH0_CS_N1	L38	IO, LVDS3B_43P, DQ55	
	DDR4_DIMM_CH0_CK_N0	P37	IO, LVDS3B_44N, DQ55	
	DDR4_DIMM_CH0_CK_P0	M37	IO, LVDS3B_44P, DQ55	
DDRT:REQ	DDR4_DIMM_CH0_CKE1	N36	IO, LVDS3B_45N, DQ55	
	DDR4_DIMM_CH0_CKE0	L36	IO, LVDS3B_45P, DQ55	
DDRT:ERR	DDR4_DIMM_CH0_ODT1	P35	IO, LVDS3B_46N, DQSN55	
	DDR4_DIMM_CH0_ODT0	M35	IO, LVDS3B_46P, DQS55	
	DDR4_DIMM_CH0_ACT_N	N34	IO, LVDS3B_47N, DQ55	
	DDR4_DIMM_CH0_CS_N0	L34	IO, LVDS3B_47P, DQ55	
	DDR4_DIMM_CH0_RESET_N	P33	IO, LVDS3B_48N, DQ55	
	DDR4_DIMM_CH0_BG1	M33	IO, LVDS3B_48P, DQ55	

IO, LVDS3B_1N, DQ48	H45	DDR4_DIMM_CH0_DQ29	
IO, LVDS3B_1P, DQ48	F45	DDR4_DIMM_CH0_DQ31	
IO, LVDS3B_2N, DQ48	J44	DDR4_DIMM_CH0_DQ28	
IO, LVDS3B_2P, DQ48	G44	DDR4_DIMM_CH0_DQ30	
IO, LVDS3B_3N, DQ48	H43	DDR4_DIMM_CH0_TDQS_N12	
IO, LVDS3B_3P, DQ48	F43	DDR4_DIMM_CH0_DBI_N3	
IO, LVDS3B_4N, DQSN48	J42	DDR4_DIMM_CH0_DQS_N3	
IO, LVDS3B_4P, DQS48	G42	DDR4_DIMM_CH0_DQS_P3	
IO, LVDS3B_5N, DQ48	H41	DDR4_DIMM_CH0_DQ27	
IO, LVDS3B_5P, DQ48	F41	DDR4_DIMM_CH0_DQ26	
IO, LVDS3B_6N, DQ48	J40	DDR4_DIMM_CH0_DQ25	
IO, LVDS3B_6P, DQ48	G40	DDR4_DIMM_CH0_DQ24	
IO, LVDS3B_7N, DQ49	D45	DDR4_DIMM_CH0_DQ20	
IO, LVDS3B_7P, DQ49	B45	DDR4_DIMM_CH0_DQ21	
IO, LVDS3B_8N, DQ49	C44	DDR4_DIMM_CH0_DQ23	
IO, LVDS3B_8P, DQ49	A44	DDR4_DIMM_CH0_DQ22	
IO, LVDS3B_9N, DQ49	D43	DDR4_DIMM_CH0_TDQS_N11	
IO, LVDS3B_9P, DQ49	B43	DDR4_DIMM_CH0_DBI_N2	
IO, PLL_3B_T_CLKOUT1N, LVDS3B_10N, DQSN49	C42	DDR4_DIMM_CH0_DQS_N2	
IO, PLL_3B_T_CLKOUT1P, PLL_3B_T_CLKOUT1, PLL_3B_T_FB1, LVDS3B_10P, DQS49	A42	DDR4_DIMM_CH0_DQS_P2	
IO, LVDS3B_11N, DQ49	D41	DDR4_DIMM_CH0_DQ19	
IO, RZQ_T_3B, LVDS3B_11P, DQ49	B41	DDR4_DIMM_CH0_DQ18	
IO, CLK_T_3B_1N, LVDS3B_12N, DQ49	C40	DDR4_DIMM_CH0_DQ17	
IO, CLK_T_3B_1P, LVDS3B_12P, DQ49	A40	DDR4_DIMM_CH0_DQ16	
IO, CLK_T_3B_0N, LVDS3B_13N, DQ50	J38	DDR4_DIMM_CH0_DQ4	
IO, CLK_T_3B_0P, LVDS3B_13P, DQ50	G38	DDR4_DIMM_CH0_DQ5	
IO, LVDS3B_14N, DQ50	H37	DDR4_DIMM_CH0_DQ7	
IO, LVDS3B_14P, DQ50	F37	DDR4_DIMM_CH0_DQ6	
IO, PLL_3B_T_CLKOUT0N, LVDS3B_15N, DQ50	J36	DDR4_DIMM_CH0_TDQS_N9	
IO, PLL_3B_T_CLKOUT0P, PLL_3B_T_CLKOUT0, PLL_3B_T_FB0, LVDS3B_15P, DQ50	G36	DDR4_DIMM_CH0_DBI_N0	
IO, LVDS3B_16N, DQSN50	H35	DDR4_DIMM_CH0_DQS_N0	
IO, LVDS3B_16P, DQS50	F35	DDR4_DIMM_CH0_DQS_P0	
IO, LVDS3B_17N, DQ50	J34	DDR4_DIMM_CH0_DQ3	
IO, LVDS3B_17P, DQ50	G34	DDR4_DIMM_CH0_DQ2	
IO, LVDS3B_18N, DQ50	H33	DDR4_DIMM_CH0_DQ1	
IO, LVDS3B_18P, DQ50	F33	DDR4_DIMM_CH0_DQ0	
IO, LVDS3B_19N, DQ51	C38	DDR4_DIMM_CH0_DQ15	
IO, LVDS3B_19P, DQ51	A38	DDR4_DIMM_CH0_DQ13	
IO, LVDS3B_20N, DQ51	D37	DDR4_DIMM_CH0_DQ12	
IO, LVDS3B_20P, DQ51	B37	DDR4_DIMM_CH0_DQ14	
IO, LVDS3B_21N, DQ51	C36	DDR4_DIMM_CH0_TDQS_N10	
IO, LVDS3B_21P, DQ51	A36	DDR4_DIMM_CH0_DBI_N1	
IO, LVDS3B_22N, DQSN51	D35	DDR4_DIMM_CH0_DQS_N1	
IO, LVDS3B_22P, DQS51	B35	DDR4_DIMM_CH0_DQS_P1	
IO, LVDS3B_23N, DQ51	C34	DDR4_DIMM_CH0_DQ11	
IO, LVDS3B_23P, DQ51	A34	DDR4_DIMM_CH0_DQ10	
IO, LVDS3B_24N, DQ51	D33	DDR4_DIMM_CH0_DQ9	
IO, LVDS3B_24P, DQ51	B33	DDR4_DIMM_CH0_DQ8	

BOT TOP

Bank 3B

AGFB014R24_2486A

9	DDR4_DIMM_CH0_CK_P[1:0]	
9	DDR4_DIMM_CH0_CK_N[1:0]	
9	DDR4_DIMM_CH0_CKE[1:0]	
9	DDR4_DIMM_CH0_A[17:0]	
9	DDR4_DIMM_CH0_ODT[1:0]	
9	DDR4_DIMM_CH0_BG[1:0]	
9	DDR4_DIMM_CH0_BA[1:0]	
9	DDR4_DIMM_CH0_CS_N[3:0]	
9	DDR4_DIMM_CH0_RESET_N	
9	DDR4_DIMM_CH0_ACT_N	
9	DDR4_DIMM_CH0_PAR	
9	DDR4_DIMM_CH0_ALERT_N	
9	DDR4_DIMM_CH0_C2	
9,10	DDR4_DIMM_CH0_DBI_N[8:0]	
9,10	DDR4_DIMM_CH0_DQ[71:0]	
9,10	DDR4_DIMM_CH0_DQS_P[8:0]	
9,10	DDR4_DIMM_CH0_DQS_N[8:0]	
9,10	DDR4_DIMM_CH0_TDQS_N[17:9]	

CLK_DDR4_CH0_P R16 DNI CLK_DDR4_CH0_N

Intel Corporation,101 innovation Dr, San Jose, CA 95134

Title: AgileX F-Series FPGA Dev Kit_Enpirion

Copyright (c) 2014, Intel Corporation. All Rights Reserved.

Size: B | Document Number: K57065-001-A | Rev: A0

Date: Friday, January 10, 2020 | Sheet 11 of 66

DDR4 Single DIMM CH1 HPS Dedicated

Note: only support 1x Rank, x8 mode in HPS

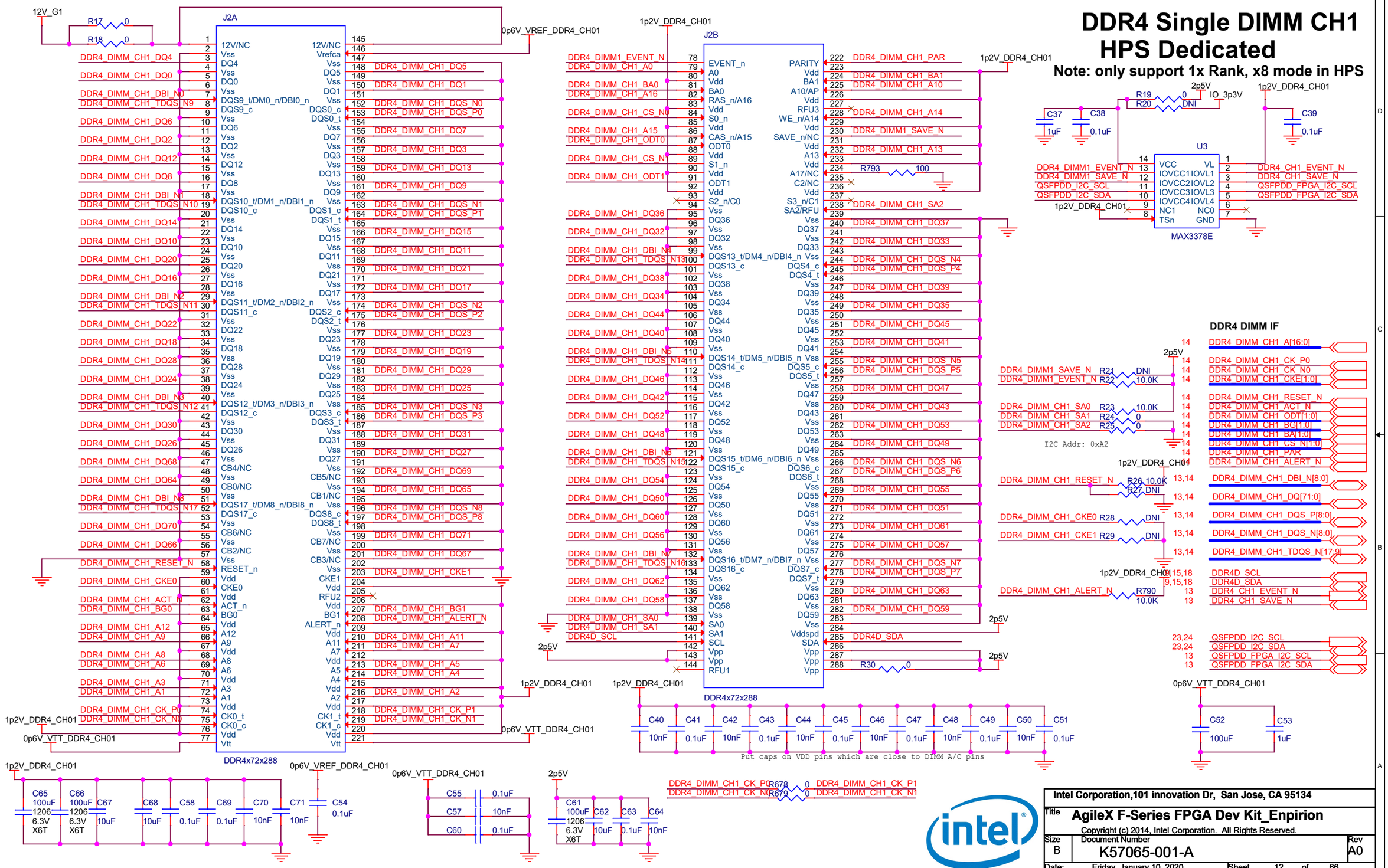

Intel Corporation,101 innovation Dr, San Jose, CA 95134

Title: AgileX F-Series FPGA Dev Kit_Enpirion

Copyright (c) 2014, Intel Corporation. All Rights Reserved.

Size: B | Document Number: K57065-001-A | Rev: A0

Date: Friday, January 10, 2020 | Sheet 12 of 66

DDR4 DIMM CH1 Interface - FPGA Side 3C

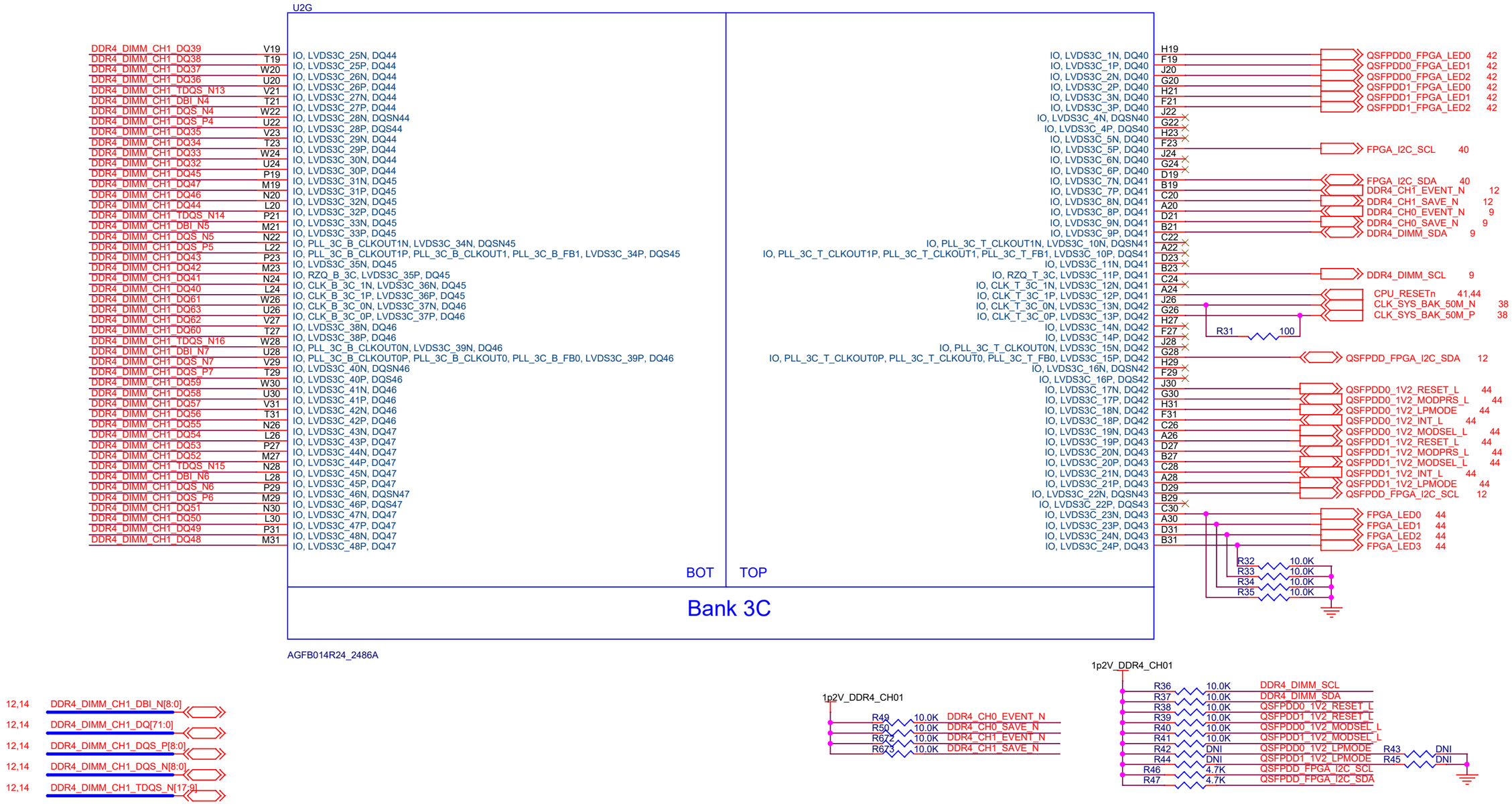

Intel Corporation,101 innovation Dr, San Jose, CA 95134

Title: AgileX F-Series FPGA Dev Kit_Enpirion

Copyright (c) 2014, Intel Corporation. All Rights Reserved.

Size	Document Number	Rev
B	K57065-001-A	A0

Date: Friday, January 10, 2020 Sheet 13 of 66

DDR4 CH1 Interface - FPGA Side 3D

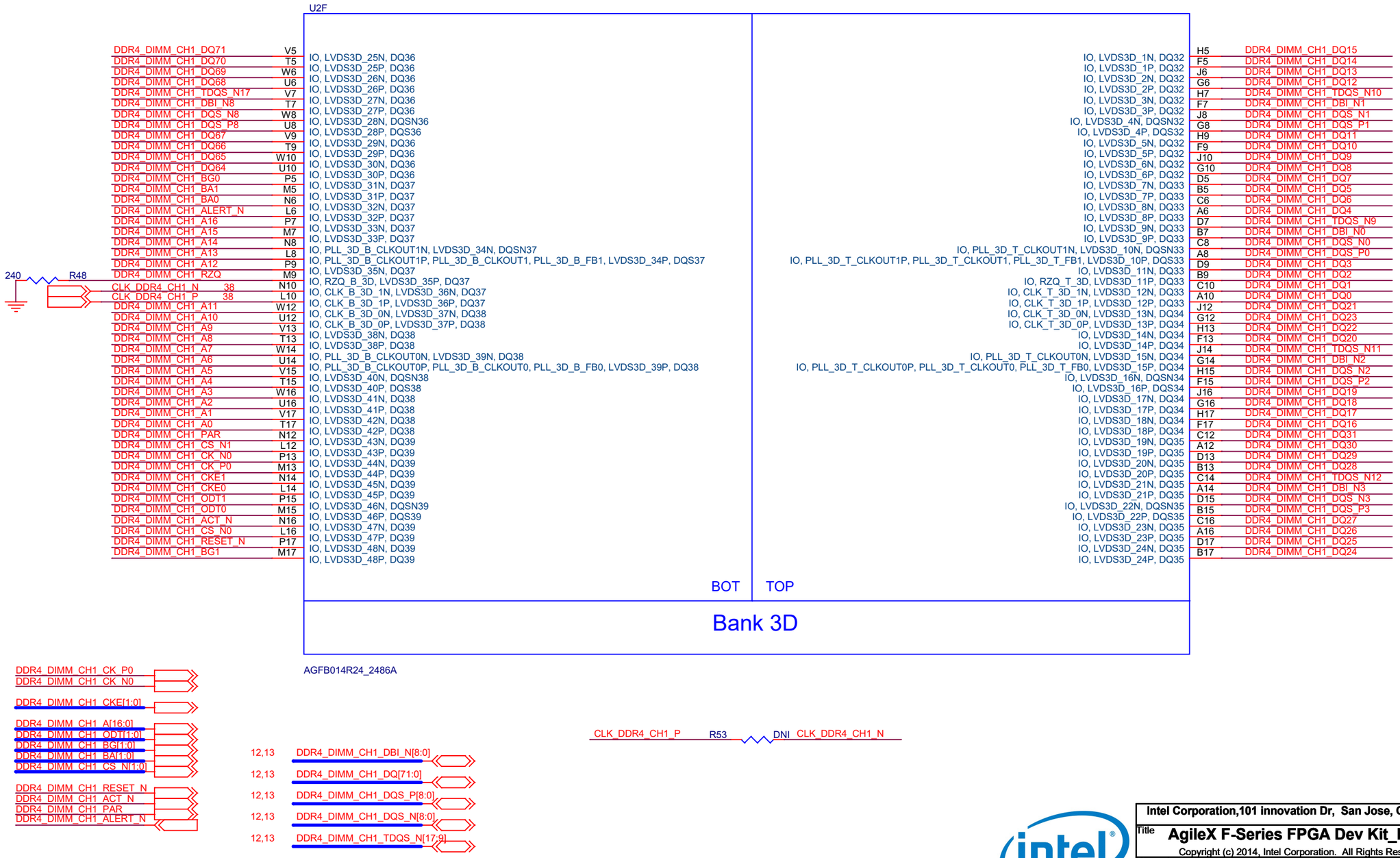

12 DDR4_DIMM_CH1_CK_P0
12 DDR4_DIMM_CH1_CK_N0

12 DDR4_DIMM_CH1_CKE[1:0]

12 DDR4_DIMM_CH1_A[16:0]
12 DDR4_DIMM_CH1_ODT[1:0]
12 DDR4_DIMM_CH1_BG[1:0]
12 DDR4_DIMM_CH1_BA[1:0]
12 DDR4_DIMM_CH1_CS_N[1:0]

12 DDR4_DIMM_CH1_RESET_N
12 DDR4_DIMM_CH1_ACT_N
12 DDR4_DIMM_CH1_PAR
12 DDR4_DIMM_CH1_ALERT_N

12,13 DDR4_DIMM_CH1_DBI_N[8:0]

12,13 DDR4_DIMM_CH1_DQ[71:0]

12,13 DDR4_DIMM_CH1_DQS_P[8:0]

12,13 DDR4_DIMM_CH1_DQS_N[8:0]

12,13 DDR4_DIMM_CH1_TDQS_N[17:9]

CLK_DDR4_CH1_P R53 DNI CLK_DDR4_CH1_N

Intel Corporation,101 innovation Dr, San Jose, CA 95134

Title **AgileX F-Series FPGA Dev Kit_Enpirion**

Copyright (c) 2014, Intel Corporation. All Rights Reserved.

Size	Document Number	Rev
B	K57065-001-A	A0

Date: Friday, January 10, 2020 Sheet 14 of 66

DDR4/DDRT Single DIMM CH2

x72bit DIMM Only

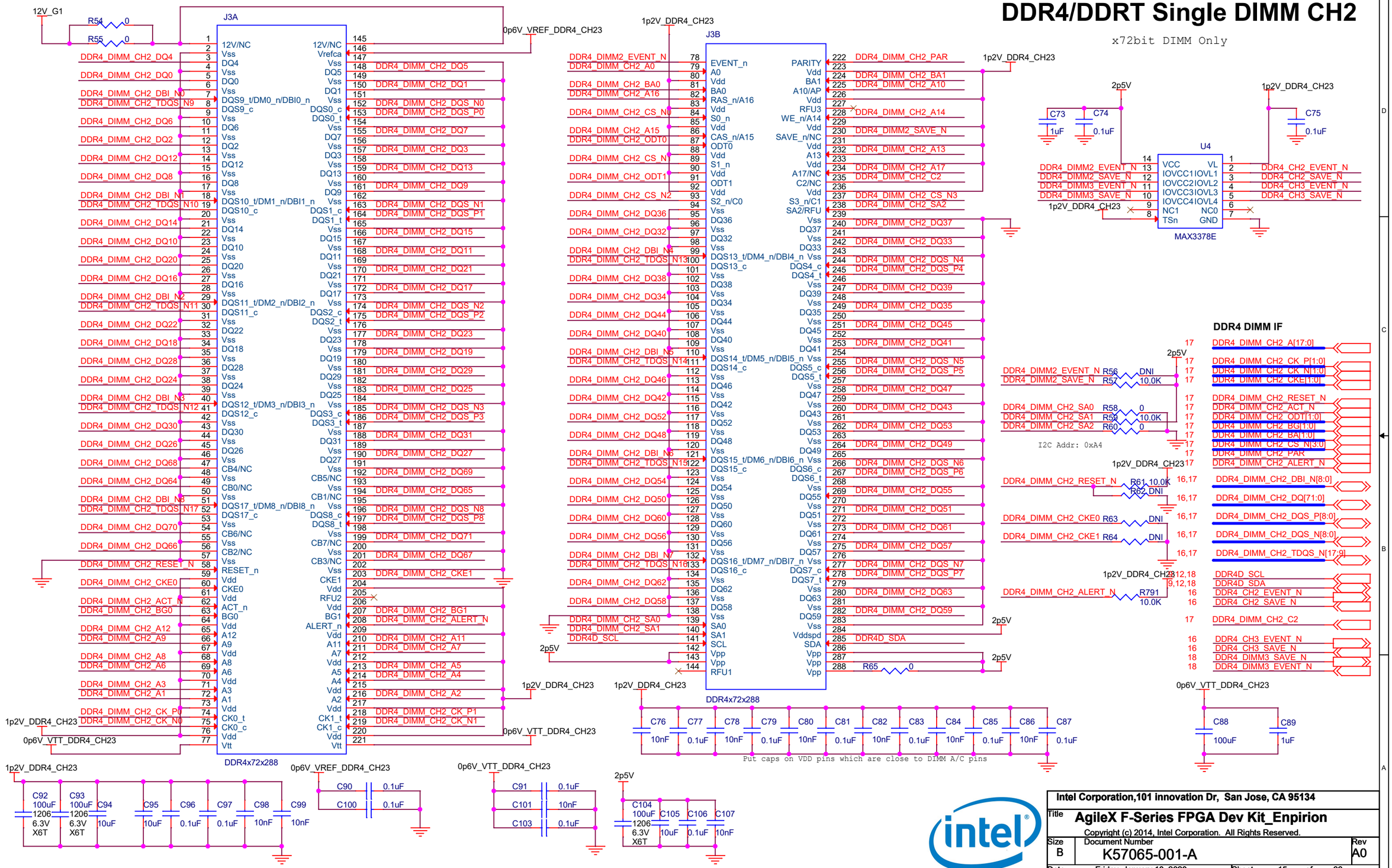

Intel Corporation,101 innovation Dr, San Jose, CA 95134

Title: AgileX F-Series FPGA Dev Kit_Enpirion

Copyright (c) 2014, Intel Corporation. All Rights Reserved.

Size	Document Number	Rev
B	K57065-001-A	A0

Date: Friday, January 10, 2020 Sheet 15 of 66

DDR4/T CH2 INTERFACE -- FPGA SIDE 2A

U2E

DDR4_DIMM_CH2_DQ6	CF57	IO, LVDS2A_25N, DQ28
DDR4_DIMM_CH2_DQ7	CH57	IO, LVDS2A_25P, DQ28
DDR4_DIMM_CH2_DQ4	CE56	IO, LVDS2A_26N, DQ28
DDR4_DIMM_CH2_DQ5	CG56	IO, LVDS2A_26P, DQ28
DDR4_DIMM_CH2_TDQS_N9	CF55	IO, LVDS2A_27N, DQ28
DDR4_DIMM_CH2_DBI_N0	CH55	IO, LVDS2A_27P, DQ28
DDR4_DIMM_CH2_DQS_N0	CE54	IO, LVDS2A_28N, DQSN28
DDR4_DIMM_CH2_DQS_P0	CG54	IO, LVDS2A_28P, DQS28
DDR4_DIMM_CH2_DQ1	CF53	IO, LVDS2A_29N, DQ28
DDR4_DIMM_CH2_DQ3	CH53	IO, LVDS2A_29P, DQ28
DDR4_DIMM_CH2_DQ0	CE52	IO, LVDS2A_30N, DQ28
DDR4_DIMM_CH2_DQ2	CG52	IO, LVDS2A_30P, DQ28
	CK57	IO, LVDS2A_31N, DQ29
	CM57	IO, LVDS2A_31P, DQ29
	CL56	IO, LVDS2A_32N, DQ29
	CN56	IO, LVDS2A_32P, DQ29
	CK55	IO, LVDS2A_33N, DQ29
	CM55	IO, LVDS2A_33P, DQ29
	CL54	IO, PLL_2A_B_CLKOUT1N, LVDS2A_34N, DQSN29
	CN54	IO, PLL_2A_B_CLKOUT1P, PLL_2A_B_CLKOUT1, PLL_2A_B_FB1, LVDS2A_34P, DQS29
	CK53	IO, LVDS2A_35N, DQ29
	CM53	IO, RZQ_B_2A, LVDS2A_35P, DQ29
	CL52	IO, CLK_B_2A_1N, LVDS2A_36N, DQ29
	CN52	IO, CLK_B_2A_1P, LVDS2A_36P, DQ29
	CE50	IO, CLK_B_2A_0N, LVDS2A_37N, DQ30
	CG50	IO, CLK_B_2A_0P, LVDS2A_37P, DQ30
	CF49	IO, LVDS2A_38N, DQ30
	CH49	IO, LVDS2A_38P, DQ30
	CE48	IO, PLL_2A_B_CLKOUT0N, LVDS2A_39N, DQ30
	CG48	IO, PLL_2A_B_CLKOUT0P, PLL_2A_B_CLKOUT0, PLL_2A_B_FB0, LVDS2A_39P, DQ30
	CF47	IO, LVDS2A_40N, DQSN30
	CH47	IO, LVDS2A_40P, DQS30
	CE46	IO, LVDS2A_41N, DQ30
	CG46	IO, LVDS2A_41P, DQ30
	CF45	IO, LVDS2A_42N, DQ30
	CH45	IO, LVDS2A_42P, DQ30
	CL50	IO, LVDS2A_43N, DQ31
	CN50	IO, LVDS2A_43P, DQ31
	CK49	IO, LVDS2A_44N, DQ31
	CM49	IO, LVDS2A_44P, DQ31
	CL48	IO, LVDS2A_45N, DQ31
	CN48	IO, LVDS2A_45P, DQ31
	CK47	IO, LVDS2A_46N, DQSN31
	CM47	IO, LVDS2A_46P, DQS31
15 DDR4_CH2_SAVE_N	CL46	IO, LVDS2A_47N, DQ31
15 DDR4_CH2_EVENT_N	CN46	IO, LVDS2A_47P, DQ31
15 DDR4_CH3_SAVE_N	CK45	IO, LVDS2A_48N, DQ31
15 DDR4_CH3_EVENT_N	CM45	IO, LVDS2A_48P, DQ31

BOT

IO, LVDS2A_1N, DQ24	CT57	DDR4_DIMM_CH2_DQ14
IO, LVDS2A_1P, DQ24	CV57	DDR4_DIMM_CH2_DQ15
IO, LVDS2A_2N, DQ24	CR56	DDR4_DIMM_CH2_DQ12
IO, LVDS2A_2P, DQ24	CU56	DDR4_DIMM_CH2_DQ13
IO, LVDS2A_3N, DQ24	CT55	DDR4_DIMM_CH2_TDQS_N10
IO, LVDS2A_3P, DQ24	CV55	DDR4_DIMM_CH2_DBI_N1
IO, LVDS2A_4N, DQSN24	CR54	DDR4_DIMM_CH2_DQS_N1
IO, LVDS2A_4P, DQS24	CU54	DDR4_DIMM_CH2_DQS_P1
IO, LVDS2A_5N, DQ24	CT53	DDR4_DIMM_CH2_DQ9
IO, LVDS2A_5P, DQ24	CV53	DDR4_DIMM_CH2_DQ11
IO, LVDS2A_6N, DQ24	CR52	DDR4_DIMM_CH2_DQ8
IO, LVDS2A_6P, DQ24	CU52	DDR4_DIMM_CH2_DQ10
IO, LVDS2A_7N, DQ25	CY57	DDR4_DIMM_CH2_DQ20
IO, LVDS2A_7P, DQ25	DB57	DDR4_DIMM_CH2_DQ21
IO, LVDS2A_8N, DQ25	DA56	DDR4_DIMM_CH2_DQ22
IO, LVDS2A_8P, DQ25	DC56	DDR4_DIMM_CH2_DQ23
IO, LVDS2A_9N, DQ25	CY55	DDR4_DIMM_CH2_TDQS_N11
IO, LVDS2A_9P, DQ25	DB55	DDR4_DIMM_CH2_DBI_N2
IO, PLL_2A_T_CLKOUT1N, LVDS2A_10N, DQSN25	DA54	DDR4_DIMM_CH2_DQS_N2
IO, PLL_2A_T_CLKOUT1P, PLL_2A_T_CLKOUT1, PLL_2A_T_FB1, LVDS2A_10P, DQS25	DC54	DDR4_DIMM_CH2_DQS_P2
IO, LVDS2A_11N, DQ25	CY53	DDR4_DIMM_CH2_DQ17
IO, RZQ_T_2A, LVDS2A_11P, DQ25	DB53	DDR4_DIMM_CH2_DQ18
IO, CLK_T_2A_1N, LVDS2A_12N, DQ25	DA52	DDR4_DIMM_CH2_DQ16
IO, CLK_T_2A_1P, LVDS2A_12P, DQ25	DC52	DDR4_DIMM_CH2_DQ19
IO, CLK_T_2A_0N, LVDS2A_13N, DQ26	CR50	DDR4_DIMM_CH2_DQ71
IO, CLK_T_2A_0P, LVDS2A_13P, DQ26	CU50	DDR4_DIMM_CH2_DQ69
IO, LVDS2A_14N, DQ26	CT49	DDR4_DIMM_CH2_DQ68
IO, LVDS2A_14P, DQ26	CV49	DDR4_DIMM_CH2_DQ70
IO, PLL_2A_T_CLKOUT0N, LVDS2A_15N, DQ26	CR48	DDR4_DIMM_CH2_TDQS_N17
IO, PLL_2A_T_CLKOUT0P, PLL_2A_T_CLKOUT0, PLL_2A_T_FB0, LVDS2A_15P, DQ26	CU48	DDR4_DIMM_CH2_DBI_N8
IO, LVDS2A_16N, DQSN26	CT47	DDR4_DIMM_CH2_DQS_N8
IO, LVDS2A_16P, DQS26	CV47	DDR4_DIMM_CH2_DQS_P8
IO, LVDS2A_17N, DQ26	CR46	DDR4_DIMM_CH2_DQ66
IO, LVDS2A_17P, DQ26	CU46	DDR4_DIMM_CH2_DQ64
IO, LVDS2A_18N, DQ26	CT45	DDR4_DIMM_CH2_DQ65
IO, LVDS2A_18P, DQ26	CV45	DDR4_DIMM_CH2_DQ67
IO, LVDS2A_19N, DQ27	DA50	DDR4_DIMM_CH2_DQ29
IO, LVDS2A_19P, DQ27	DC50	DDR4_DIMM_CH2_DQ28
IO, LVDS2A_20N, DQ27	CY49	DDR4_DIMM_CH2_DQ31
IO, LVDS2A_20P, DQ27	DB49	DDR4_DIMM_CH2_DQ30
IO, LVDS2A_21N, DQ27	DA48	DDR4_DIMM_CH2_TDQS_N12
IO, LVDS2A_21P, DQ27	DC48	DDR4_DIMM_CH2_DBI_N3
IO, LVDS2A_22N, DQSN27	CY47	DDR4_DIMM_CH2_DQS_N3
IO, LVDS2A_22P, DQS27	DB47	DDR4_DIMM_CH2_DQS_P3
IO, LVDS2A_23N, DQ27	DA46	DDR4_DIMM_CH2_DQ24
IO, LVDS2A_23P, DQ27	DC46	DDR4_DIMM_CH2_DQ25
IO, LVDS2A_24N, DQ27	CY45	DDR4_DIMM_CH2_DQ27
IO, LVDS2A_24P, DQ27	DB45	DDR4_DIMM_CH2_DQ26

TOP

Bank 2A

AGFB014R24_2486A

15,17 DDR4_DIMM_CH2_DBI_N[8:0]

15,17 DDR4_DIMM_CH2_DQ[71:0]

15,17 DDR4_DIMM_CH2_DQS_P[8:0]

15,17 DDR4_DIMM_CH2_DQS_N[8:0]

15,17 DDR4_DIMM_CH2_TDQS_N[17:9]

1p2V_DDR4_CH23

R674	10.0K	DDR4_CH2_EVENT_N
R675	10.0K	DDR4_CH2_SAVE_N
R676	10.0K	DDR4_CH3_EVENT_N
R677	10.0K	DDR4_CH3_SAVE_N

Intel Corporation,101 innovation Dr, San Jose, CA 95134

Title: AgileX F-Series FPGA Dev Kit_Enpirion

Copyright (c) 2014, Intel Corporation. All Rights Reserved.

Size: B | Document Number: K57065-001-A | Rev: A0

Date: Friday, January 10, 2020 | Sheet 16 of 66

DDR4/T CH2 INTERFACE -- FPGA SIDE 2B

U2D

DDRT:ERID2	DDR4_DIMM_CH2_CK_N1	CF43	IO, LVDS2B_25N, DQ20	
DDRT:ERID0	DDR4_DIMM_CH2_CK_P1	CH43	IO, LVDS2B_25P, DQ20	
		CE42	IO, LVDS2B_26N, DQ20	
DDRT:NC	DDR4_DIMM_CH2_ALERT_N	CG42	IO, LVDS2B_26P, DQ20	
		CF41	IO, LVDS2B_27N, DQ20	
		CH41	IO, LVDS2B_27P, DQ20	
		CE40	IO, LVDS2B_28N, DQSN20	
		CG40	IO, LVDS2B_28P, DQS20	
		CF39	IO, LVDS2B_29N, DQ20	
DDRT:C3	DDR4_DIMM_CH2_C2	CH39	IO, LVDS2B_29P, DQ20	
DDRT:C2	DDR4_DIMM_CH2_CS_N3	CE38	IO, LVDS2B_30N, DQ20	
DDRT:C1	DDR4_DIMM_CH2_CS_N2	CG38	IO, LVDS2B_30P, DQ20	
	DDR4_DIMM_CH2_BG0	CK43	IO, LVDS2B_31N, DQ21	
	DDR4_DIMM_CH2_BA1	CM43	IO, LVDS2B_31P, DQ21	
	DDR4_DIMM_CH2_BA0	CL42	IO, LVDS2B_32N, DQ21	
	DDR4_DIMM_CH2_A17	CN42	IO, LVDS2B_32P, DQ21	
	DDR4_DIMM_CH2_A16	CK41	IO, LVDS2B_33N, DQ21	
	DDR4_DIMM_CH2_A15	CM41	IO, LVDS2B_33P, DQ21	
	DDR4_DIMM_CH2_A14	CL40	IO, PLL_2B_B_CLKOUT1N, LVDS2B_34N, DQSN21	
	DDR4_DIMM_CH2_A13	CN40	IO, PLL_2B_B_CLKOUT1P, PLL_2B_B_CLKOUT1, PLL_2B_B_FB1, LVDS2B_34P, DQS21	
	DDR4_DIMM_CH2_A12	CK39	IO, LVDS2B_35N, DQ21	
	DDR4_DIMM_CH2_RZQ	CM39	IO, RZQ_B_2B, LVDS2B_35P, DQ21	
	CLK_DDR4_CH2_N 38	CL38	IO, CLK_B_2B_1N, LVDS2B_36N, DQ21	
	CLK_DDR4_CH2_P 38	CN38	IO, CLK_B_2B_1P, LVDS2B_36P, DQ21	
	DDR4_DIMM_CH2_A11	CE36	IO, CLK_B_2B_0N, LVDS2B_37N, DQ22	
	DDR4_DIMM_CH2_A10	CG36	IO, CLK_B_2B_0P, LVDS2B_37P, DQ22	
	DDR4_DIMM_CH2_A9	CF35	IO, LVDS2B_38N, DQ22	
	DDR4_DIMM_CH2_A8	CH35	IO, LVDS2B_38P, DQ22	
	DDR4_DIMM_CH2_A7	CE34	IO, PLL_2B_B_CLKOUT0N, LVDS2B_39N, DQ22	
	DDR4_DIMM_CH2_A6	CG34	IO, PLL_2B_B_CLKOUT0P, PLL_2B_B_CLKOUT0, PLL_2B_B_FB0, LVDS2B_39P, DQ22	
	DDR4_DIMM_CH2_A5	CF33	IO, LVDS2B_40N, DQSN22	
	DDR4_DIMM_CH2_A4	CH33	IO, LVDS2B_40P, DQS22	
	DDR4_DIMM_CH2_A3	CE32	IO, LVDS2B_41N, DQ22	
	DDR4_DIMM_CH2_A2	CG32	IO, LVDS2B_41P, DQ22	
	DDR4_DIMM_CH2_A1	CF31	IO, LVDS2B_42N, DQ22	
	DDR4_DIMM_CH2_A0	CH31	IO, LVDS2B_42P, DQ22	
	DDR4_DIMM_CH2_PAR	CL36	IO, LVDS2B_43N, DQ23	
DDRT:GNT0	DDR4_DIMM_CH2_CS_N1	CN36	IO, LVDS2B_43P, DQ23	
	DDR4_DIMM_CH2_CK_N0	CK35	IO, LVDS2B_44N, DQ23	
	DDR4_DIMM_CH2_CK_P0	CM35	IO, LVDS2B_44P, DQ23	
DDRT:REQ	DDR4_DIMM_CH2_CKE1	CL34	IO, LVDS2B_45N, DQ23	
	DDR4_DIMM_CH2_CKE0	CN34	IO, LVDS2B_45P, DQ23	
DDRT:ERR	DDR4_DIMM_CH2_ODT1	CK33	IO, LVDS2B_46N, DQSN23	
	DDR4_DIMM_CH2_ODT0	CM33	IO, LVDS2B_46P, DQS23	
	DDR4_DIMM_CH2_ACT_N	CL32	IO, LVDS2B_47N, DQ23	
	DDR4_DIMM_CH2_CS_N0	CN32	IO, LVDS2B_47P, DQ23	
	DDR4_DIMM_CH2_RESET_N	CK31	IO, LVDS2B_48N, DQ23	
	DDR4_DIMM_CH2_BG1	CM31	IO, LVDS2B_48P, DQ23	

240 R66

BOT | TOP

IO, LVDS2B_1N, DQ16	CT43	DDR4_DIMM_CH2_DQ39	
IO, LVDS2B_1P, DQ16	CV43	DDR4_DIMM_CH2_DQ37	
IO, LVDS2B_2N, DQ16	CR42	DDR4_DIMM_CH2_DQ38	
IO, LVDS2B_2P, DQ16	CU42	DDR4_DIMM_CH2_DQ36	
IO, LVDS2B_3N, DQ16	CT41	DDR4_DIMM_CH2_TDQS_N13	
IO, LVDS2B_3P, DQ16	CV41	DDR4_DIMM_CH2_DBI_N4	
IO, LVDS2B_4N, DQSN16	CR40	DDR4_DIMM_CH2_DQS_N4	
IO, LVDS2B_4P, DQS16	CU40	DDR4_DIMM_CH2_DQS_P4	
IO, LVDS2B_5N, DQ16	CT39	DDR4_DIMM_CH2_DQ32	
IO, LVDS2B_5P, DQ16	CV39	DDR4_DIMM_CH2_DQ33	
IO, LVDS2B_6N, DQ16	CR38	DDR4_DIMM_CH2_DQ35	
IO, LVDS2B_6P, DQ16	CU38	DDR4_DIMM_CH2_DQ34	
IO, LVDS2B_7N, DQ17	CY43	DDR4_DIMM_CH2_DQ47	
IO, LVDS2B_7P, DQ17	DB43	DDR4_DIMM_CH2_DQ45	
IO, LVDS2B_8N, DQ17	DA42	DDR4_DIMM_CH2_DQ46	
IO, LVDS2B_8P, DQ17	DC42	DDR4_DIMM_CH2_DQ44	
IO, LVDS2B_9N, DQ17	CY41	DDR4_DIMM_CH2_TDQS_N14	
IO, LVDS2B_9P, DQ17	DB41	DDR4_DIMM_CH2_DBI_N5	
IO, PLL_2B_T_CLKOUT1N, LVDS2B_10N, DQSN17	DA40	DDR4_DIMM_CH2_DQS_N5	
IO, PLL_2B_T_CLKOUT1P, PLL_2B_T_CLKOUT1, PLL_2B_T_FB1, LVDS2B_10P, DQS17	DC40	DDR4_DIMM_CH2_DQS_P5	
IO, LVDS2B_11N, DQ17	CY39	DDR4_DIMM_CH2_DQ40	
IO, RZQ_T_2B, LVDS2B_11P, DQ17	DB39	DDR4_DIMM_CH2_DQ41	
IO, CLK_T_2B_1N, LVDS2B_12N, DQ17	DA38	DDR4_DIMM_CH2_DQ43	
IO, CLK_T_2B_1P, LVDS2B_12P, DQ17	DC38	DDR4_DIMM_CH2_DQ42	
IO, CLK_T_2B_0N, LVDS2B_13N, DQ18	CR36	DDR4_DIMM_CH2_DQ63	
IO, CLK_T_2B_0P, LVDS2B_13P, DQ18	CU36	DDR4_DIMM_CH2_DQ61	
IO, LVDS2B_14N, DQ18	CT35	DDR4_DIMM_CH2_DQ62	
IO, LVDS2B_14P, DQ18	CV35	DDR4_DIMM_CH2_DQ60	
IO, PLL_2B_T_CLKOUT0N, LVDS2B_15N, DQ18	CR34	DDR4_DIMM_CH2_TDQS_N16	
IO, PLL_2B_T_CLKOUT0P, PLL_2B_T_CLKOUT0, PLL_2B_T_FB0, LVDS2B_15P, DQ18	CU34	DDR4_DIMM_CH2_DBI_N7	
IO, LVDS2B_16N, DQSN18	CT33	DDR4_DIMM_CH2_DQS_N7	
IO, LVDS2B_16P, DQS18	CV33	DDR4_DIMM_CH2_DQS_P7	
IO, LVDS2B_17N, DQ18	CR32	DDR4_DIMM_CH2_DQ56	
IO, LVDS2B_17P, DQ18	CU32	DDR4_DIMM_CH2_DQ57	
IO, LVDS2B_18N, DQ18	CT31	DDR4_DIMM_CH2_DQ59	
IO, LVDS2B_18P, DQ18	CV31	DDR4_DIMM_CH2_DQ58	
IO, LVDS2B_19N, DQ19	DA36	DDR4_DIMM_CH2_DQ52	
IO, LVDS2B_19P, DQ19	DC36	DDR4_DIMM_CH2_DQ53	
IO, LVDS2B_20N, DQ19	CY35	DDR4_DIMM_CH2_DQ55	
IO, LVDS2B_20P, DQ19	DB35	DDR4_DIMM_CH2_DQ54	
IO, LVDS2B_21N, DQ19	DA34	DDR4_DIMM_CH2_TDQS_N15	
IO, LVDS2B_21P, DQ19	DC34	DDR4_DIMM_CH2_DBI_N6	
IO, LVDS2B_22N, DQSN19	CY33	DDR4_DIMM_CH2_DQS_N6	
IO, LVDS2B_22P, DQS19	DB33	DDR4_DIMM_CH2_DQS_P6	
IO, LVDS2B_23N, DQ19	DA32	DDR4_DIMM_CH2_DQ48	
IO, LVDS2B_23P, DQ19	DC32	DDR4_DIMM_CH2_DQ49	
IO, LVDS2B_24N, DQ19	CY31	DDR4_DIMM_CH2_DQ51	
IO, LVDS2B_24P, DQ19	DB31	DDR4_DIMM_CH2_DQ50	

Bank 2B

AGFB014R24_2486A

15	DDR4_DIMM_CH2_CK_P[1:0]
15	DDR4_DIMM_CH2_CK_N[1:0]
15	DDR4_DIMM_CH2_CKE[1:0]
15	DDR4_DIMM_CH2_A[17:0]
15	DDR4_DIMM_CH2_ODT[1:0]
15	DDR4_DIMM_CH2_BG[1:0]
15	DDR4_DIMM_CH2_BA[1:0]
15	DDR4_DIMM_CH2_CS_N[3:0]
15	DDR4_DIMM_CH2_RESET_N
15	DDR4_DIMM_CH2_ACT_N
15	DDR4_DIMM_CH2_PAR
15	DDR4_DIMM_CH2_ALERT_N
15	DDR4_DIMM_CH2_C2

15,16	DDR4_DIMM_CH2_DBI_N[8:0]
15,16	DDR4_DIMM_CH2_DQ[71:0]
15,16	DDR4_DIMM_CH2_DQS_P[8:0]
15,16	DDR4_DIMM_CH2_DQS_N[8:0]
15,16	DDR4_DIMM_CH2_TDQS_N[17:9]

CLK_DDR4_CH2_P R67 DNI CLK_DDR4_CH2_N

Intel Corporation,101 innovation Dr, San Jose, CA 95134

Title: AgileX F-Series FPGA Dev Kit_Enpirion

Copyright (c) 2014, Intel Corporation. All Rights Reserved.

Size: B | Document Number: K57065-001-A | Rev: A0

Date: Friday, January 10, 2020 | Sheet 17 of 66

DDR4/DDRT Single DIMM CH3

x72bit DIMM Only

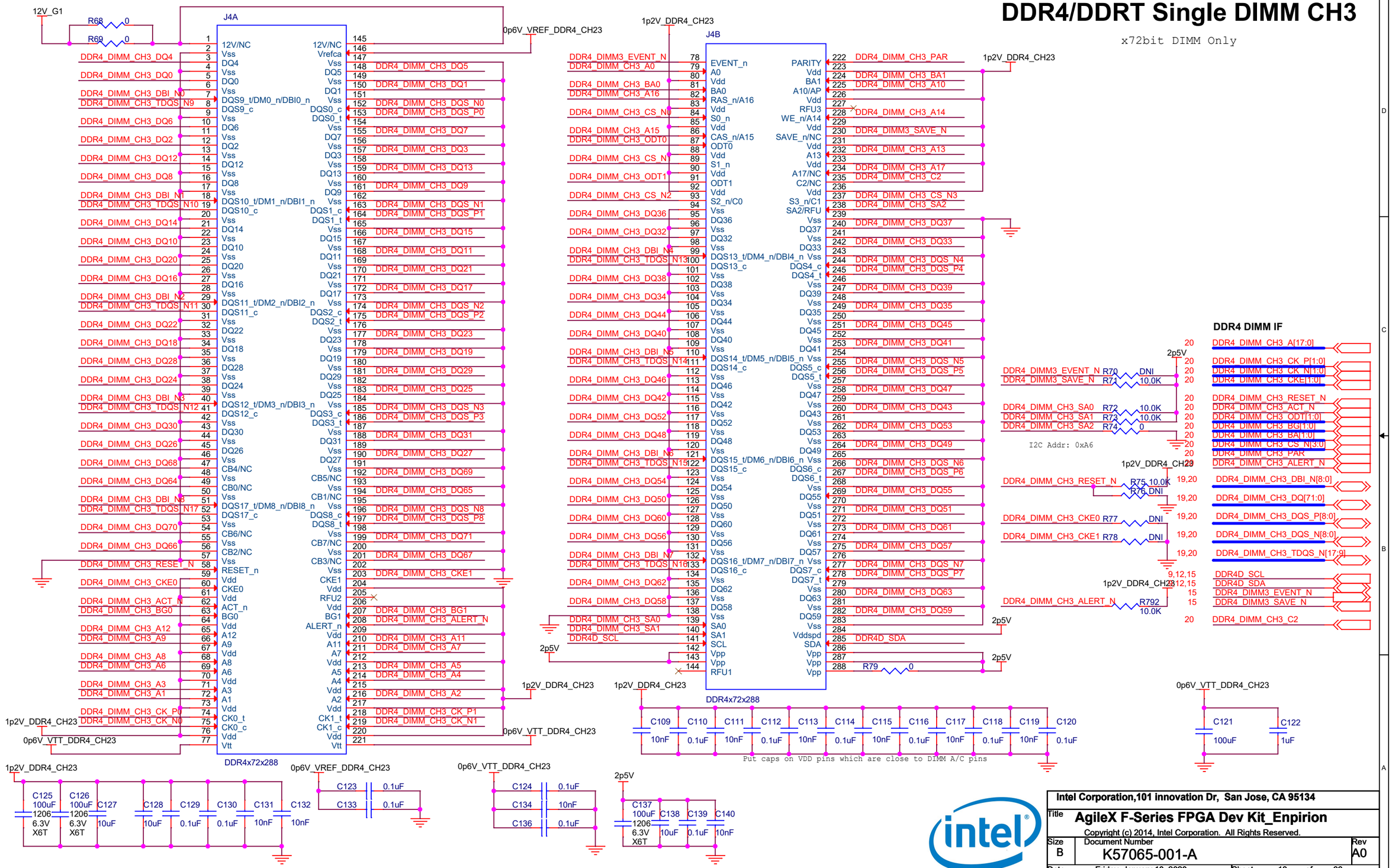

Intel Corporation,101 innovation Dr, San Jose, CA 95134

Title: AgileX F-Series FPGA Dev Kit_Enpirion

Copyright (c) 2014, Intel Corporation. All Rights Reserved.

Size	Document Number	Rev
B	K57065-001-A	A0

Date: Friday, January 10, 2020 Sheet 18 of 66

DDR4/T CH3 INTERFACE -- FPGA SIDE 2C

U2C

		BOT	TOP		
DDR4_DIMM_CH3_DQ23	CF17	IO, LVDS2C_25N, DQ12	IO, LVDS2C_1N, DQ8	CT17	
DDR4_DIMM_CH3_DQ22	CH17	IO, LVDS2C_25P, DQ12	IO, LVDS2C_1P, DQ8	CV17	PCIE_EP_I2C_SDA 25
DDR4_DIMM_CH3_DQ20	CE18	IO, LVDS2C_26N, DQ12	IO, LVDS2C_2N, DQ8	CR18	PCIE_EP_WAKEN 25
DDR4_DIMM_CH3_DQ21	CG18	IO, LVDS2C_26P, DQ12	IO, LVDS2C_2P, DQ8	CU18	
DDR4_DIMM_CH3_TDQS_N11	CF19	IO, LVDS2C_27N, DQ12	IO, LVDS2C_3N, DQ8	CT19	PCIE_EP_I2C_SCL 25
DDR4_DIMM_CH3_DBI_N2	CH19	IO, LVDS2C_27P, DQ12	IO, LVDS2C_3P, DQ8	CV19	
DDR4_DIMM_CH3_DQS_N2	CE20	IO, LVDS2C_28N, DQSN12	IO, LVDS2C_4N, DQSN8	CR20	PCIE_1V2_CLKREQn 25
DDR4_DIMM_CH3_DQS_P2	CG20	IO, LVDS2C_28P, DQS12	IO, LVDS2C_4P, DQS8	CU20	
DDR4_DIMM_CH3_DQ17	CF21	IO, LVDS2C_29N, DQ12	IO, LVDS2C_5N, DQ8	CT21	
DDR4_DIMM_CH3_DQ16	CH21	IO, LVDS2C_29P, DQ12	IO, LVDS2C_5P, DQ8	CV21	
DDR4_DIMM_CH3_DQ18	CE22	IO, LVDS2C_30N, DQ12	IO, LVDS2C_6N, DQ8	CR22	
DDR4_DIMM_CH3_DQ19	CG22	IO, LVDS2C_30P, DQ12	IO, LVDS2C_6P, DQ8	CU22	
DDR4_DIMM_CH3_DQ68	CK17	IO, LVDS2C_31N, DQ13	IO, LVDS2C_7N, DQ9	CY17	
DDR4_DIMM_CH3_DQ71	CM17	IO, LVDS2C_31P, DQ13	IO, LVDS2C_7P, DQ9	DB17	
DDR4_DIMM_CH3_DQ69	CL18	IO, LVDS2C_32N, DQ13	IO, LVDS2C_8N, DQ9	DA18	
DDR4_DIMM_CH3_DQ70	CN18	IO, LVDS2C_32P, DQ13	IO, LVDS2C_8P, DQ9	DC18	
DDR4_DIMM_CH3_TDQS_N17	CK19	IO, LVDS2C_33N, DQ13	IO, LVDS2C_9N, DQ9	CY19	
DDR4_DIMM_CH3_DBI_N8	CM19	IO, LVDS2C_33P, DQ13	IO, LVDS2C_9P, DQ9	DB19	
DDR4_DIMM_CH3_DQS_N8	CL20	IO, PLL_2C_B_CLKOUT1N, LVDS2C_34N, DQSN13	IO, PLL_2C_T_CLKOUT1N, LVDS2C_10N, DQSN9	DA20	
DDR4_DIMM_CH3_DQS_P8	CN20	IO, PLL_2C_B_CLKOUT1P, PLL_2C_B_CLKOUT1, PLL_2C_B_FB1, LVDS2C_34P, DQS13	IO, PLL_2C_T_CLKOUT1P, PLL_2C_T_CLKOUT1, PLL_2C_T_FB1, LVDS2C_10P, DQS9	DC20	
DDR4_DIMM_CH3_DQ66	CK21	IO, LVDS2C_35N, DQ13	IO, LVDS2C_11N, DQ9	CY21	
DDR4_DIMM_CH3_DQ64	CM21	IO, RZQ_B_2C, LVDS2C_35P, DQ13	IO, RZQ_T_2C, LVDS2C_11P, DQ9	DB21	
DDR4_DIMM_CH3_DQ67	CL22	IO, CLK_B_2C_1N, LVDS2C_36N, DQ13	IO, CLK_T_2C_1N, LVDS2C_12N, DQ9	DA22	
DDR4_DIMM_CH3_DQ65	CN22	IO, CLK_B_2C_1P, LVDS2C_36P, DQ13	IO, CLK_T_2C_1P, LVDS2C_12P, DQ9	DC22	
DDR4_DIMM_CH3_DQ12	CE24	IO, CLK_B_2C_0N, LVDS2C_37N, DQ14	IO, CLK_T_2C_0N, LVDS2C_13N, DQ10	CR24	CLK_SYS_100M_N 38
DDR4_DIMM_CH3_DQ15	CG24	IO, CLK_B_2C_0P, LVDS2C_37P, DQ14	IO, CLK_T_2C_0P, LVDS2C_13P, DQ10	CU24	CLK_SYS_100M_P 38
DDR4_DIMM_CH3_DQ14	CF25	IO, LVDS2C_38N, DQ14	IO, LVDS2C_14N, DQ10	CT25	R80 100
DDR4_DIMM_CH3_DQ13	CH25	IO, LVDS2C_38P, DQ14	IO, LVDS2C_14P, DQ10	CV25	
DDR4_DIMM_CH3_TDQS_N10	CE26	IO, PLL_2C_B_CLKOUT0N, LVDS2C_39N, DQ14	IO, PLL_2C_T_CLKOUT0N, LVDS2C_15N, DQ10	CR26	
DDR4_DIMM_CH3_DBI_N1	CG26	IO, PLL_2C_B_CLKOUT0P, PLL_2C_B_CLKOUT0, PLL_2C_B_FB0, LVDS2C_39P, DQ14	IO, PLL_2C_T_CLKOUT0P, PLL_2C_T_CLKOUT0, PLL_2C_T_FB0, LVDS2C_15P, DQ10	CU26	
DDR4_DIMM_CH3_DQS_N1	CF27	IO, LVDS2C_40N, DQSN14	IO, LVDS2C_16N, DQSN10	CT27	
DDR4_DIMM_CH3_DQS_P1	CH27	IO, LVDS2C_40P, DQS14	IO, LVDS2C_16P, DQS10	CV27	
DDR4_DIMM_CH3_DQ10	CE28	IO, LVDS2C_41N, DQ14	IO, LVDS2C_17N, DQ10	CR28	
DDR4_DIMM_CH3_DQ8	CG28	IO, LVDS2C_41P, DQ14	IO, LVDS2C_17P, DQ10	CU28	
DDR4_DIMM_CH3_DQ11	CF29	IO, LVDS2C_42N, DQ14	IO, LVDS2C_18N, DQ10	CT29	
DDR4_DIMM_CH3_DQ9	CH29	IO, LVDS2C_42P, DQ14	IO, LVDS2C_18P, DQ10	CV29	
DDR4_DIMM_CH3_DQ7	CL24	IO, LVDS2C_43N, DQ15	IO, LVDS2C_19N, DQ11	DA24	DDR4_DIMM_CH3_DQ31
DDR4_DIMM_CH3_DQ6	CN24	IO, LVDS2C_43P, DQ15	IO, LVDS2C_19P, DQ11	DC24	DDR4_DIMM_CH3_DQ30
DDR4_DIMM_CH3_DQ4	CK25	IO, LVDS2C_44N, DQ15	IO, LVDS2C_20N, DQ11	CY25	DDR4_DIMM_CH3_DQ28
DDR4_DIMM_CH3_DQ5	CM25	IO, LVDS2C_44P, DQ15	IO, LVDS2C_20P, DQ11	DB25	DDR4_DIMM_CH3_DQ29
DDR4_DIMM_CH3_TDQS_N9	CL26	IO, LVDS2C_45N, DQ15	IO, LVDS2C_21N, DQ11	DA26	DDR4_DIMM_CH3_TDQS_N12
DDR4_DIMM_CH3_DBI_N0	CN26	IO, LVDS2C_45P, DQ15	IO, LVDS2C_21P, DQ11	DC26	DDR4_DIMM_CH3_DBI_N3
DDR4_DIMM_CH3_DQS_N0	CK27	IO, LVDS2C_46N, DQSN15	IO, LVDS2C_22N, DQSN11	CY27	DDR4_DIMM_CH3_DQS_N3
DDR4_DIMM_CH3_DQS_P0	CM27	IO, LVDS2C_46P, DQS15	IO, LVDS2C_22P, DQS11	DB27	DDR4_DIMM_CH3_DQS_P3
DDR4_DIMM_CH3_DQ1	CL28	IO, LVDS2C_47N, DQ15	IO, LVDS2C_23N, DQ11	DA28	DDR4_DIMM_CH3_DQ25
DDR4_DIMM_CH3_DQ0	CN28	IO, LVDS2C_47P, DQ15	IO, LVDS2C_23P, DQ11	DC28	DDR4_DIMM_CH3_DQ24
DDR4_DIMM_CH3_DQ2	CK29	IO, LVDS2C_48N, DQ15	IO, LVDS2C_24N, DQ11	CY29	DDR4_DIMM_CH3_DQ26
DDR4_DIMM_CH3_DQ3	CM29	IO, LVDS2C_48P, DQ15	IO, LVDS2C_24P, DQ11	DB29	DDR4_DIMM_CH3_DQ27

Bank 2C

AGFB014R24_2486A

1p2V_DDR4_CH23

R81	10.0K	PCIE_EP_I2C_SCL
R82	10.0K	PCIE_EP_I2C_SDA
R83	10.0K	PCIE_EP_WAKEN

18,20	DDR4_DIMM_CH3_DBI_N[8:0]
18,20	DDR4_DIMM_CH3_DQ[71:0]
18,20	DDR4_DIMM_CH3_DQS_P[8:0]
18,20	DDR4_DIMM_CH3_DQS_N[8:0]
18,20	DDR4_DIMM_CH3_TDQS_N[17:9]

Intel Corporation,101 innovation Dr, San Jose, CA 95134

Title: AgileX F-Series FPGA Dev Kit_Enpirion

Copyright (c) 2014, Intel Corporation. All Rights Reserved.

Size: B | Document Number: K57065-001-A | Rev: A0

Date: Friday, January 10, 2020 | Sheet 19 of 66

DDR4/T CH3 INTERFACE -- FPGA SIDE 2D

U2B

DDR4_DIMM_CH3_DQ63	CF3	IO, LVDS2D_25N, DQ4	
DDR4_DIMM_CH3_DQ62	CH3	IO, LVDS2D_25P, DQ4	
DDR4_DIMM_CH3_DQ60	CE4	IO, LVDS2D_26N, DQ4	
DDR4_DIMM_CH3_DQ61	CG4	IO, LVDS2D_26P, DQ4	
DDR4_DIMM_CH3_TDQS_N16	CF5	IO, LVDS2D_27N, DQ4	
DDR4_DIMM_CH3_DBI_N7	CH5	IO, LVDS2D_27P, DQ4	
DDR4_DIMM_CH3_DQS_N7	CE6	IO, LVDS2D_28N, DQSN4	
DDR4_DIMM_CH3_DQS_P7	CG6	IO, LVDS2D_28P, DQS4	
DDR4_DIMM_CH3_DQ57	CF7	IO, LVDS2D_29N, DQ4	
DDR4_DIMM_CH3_DQ56	CH7	IO, LVDS2D_29P, DQ4	
DDR4_DIMM_CH3_DQ58	CE8	IO, LVDS2D_30N, DQ4	
DDR4_DIMM_CH3_DQ59	CG8	IO, LVDS2D_30P, DQ4	
DDR4_DIMM_CH3_DQ52	CK3	IO, LVDS2D_31N, DQ5	
DDR4_DIMM_CH3_DQ55	CM3	IO, LVDS2D_31P, DQ5	
DDR4_DIMM_CH3_DQ54	CL4	IO, LVDS2D_32N, DQ5	
DDR4_DIMM_CH3_DQ53	CN4	IO, LVDS2D_32P, DQ5	
DDR4_DIMM_CH3_TDQS_N15	CK5	IO, LVDS2D_33N, DQ5	
DDR4_DIMM_CH3_DBI_N6	CM5	IO, LVDS2D_33P, DQ5	
DDR4_DIMM_CH3_DQS_N6	CL6	IO, PLL_2D_B_CLKOUT1N, LVDS2D_34N, DQSN5	IO, LVDS2D_1N, DQ0
DDR4_DIMM_CH3_DQS_P6	CN6	IO, PLL_2D_B_CLKOUT1P, PLL_2D_B_CLKOUT1, PLL_2D_B_FB1, LVDS2D_34P, DQS5	IO, LVDS2D_1P, DQ0
DDR4_DIMM_CH3_DQ50	CK7	IO, LVDS2D_35N, DQ5	IO, LVDS2D_2N, DQ0
DDR4_DIMM_CH3_DQ48	CM7	IO, RZQ_B_2D, LVDS2D_35P, DQ5	IO, LVDS2D_2P, DQ0
DDR4_DIMM_CH3_DQ51	CL8	IO, CLK_B_2D_1N, LVDS2D_36N, DQ5	IO, LVDS2D_3N, DQ0
DDR4_DIMM_CH3_DQ49	CN8	IO, CLK_B_2D_1P, LVDS2D_36P, DQ5	IO, LVDS2D_3P, DQ0
DDR4_DIMM_CH3_DQ44	CE10	IO, CLK_B_2D_0N, LVDS2D_37N, DQ6	IO, LVDS2D_4N, DQSN0
DDR4_DIMM_CH3_DQ47	CG10	IO, CLK_B_2D_0P, LVDS2D_37P, DQ6	IO, LVDS2D_4P, DQS0
DDR4_DIMM_CH3_DQ46	CF11	IO, LVDS2D_38N, DQ6	IO, LVDS2D_5N, DQ0
DDR4_DIMM_CH3_DQ45	CH11	IO, LVDS2D_38P, DQ6	IO, LVDS2D_5P, DQ0
DDR4_DIMM_CH3_TDQS_N14	CE12	IO, PLL_2D_B_CLKOUT0N, LVDS2D_39N, DQ6	IO, LVDS2D_6N, DQ0
DDR4_DIMM_CH3_DBI_N5	CG12	IO, PLL_2D_B_CLKOUT0P, PLL_2D_B_CLKOUT0, PLL_2D_B_FB0, LVDS2D_39P, DQ6	IO, LVDS2D_6P, DQ0
DDR4_DIMM_CH3_DQS_N5	CF13	IO, LVDS2D_40N, DQSN6	IO, LVDS2D_7N, DQ1
DDR4_DIMM_CH3_DQS_P5	CH13	IO, LVDS2D_40P, DQS6	IO, LVDS2D_7P, DQ1
DDR4_DIMM_CH3_DQ42	CE14	IO, LVDS2D_41N, DQ6	IO, LVDS2D_8N, DQ1
DDR4_DIMM_CH3_DQ40	CG14	IO, LVDS2D_41P, DQ6	IO, LVDS2D_8P, DQ1
DDR4_DIMM_CH3_DQ43	CF15	IO, LVDS2D_42N, DQ6	IO, LVDS2D_9N, DQ1
DDR4_DIMM_CH3_DQ41	CH15	IO, LVDS2D_42P, DQ6	IO, LVDS2D_9P, DQ1
DDR4_DIMM_CH3_DQ39	CL10	IO, LVDS2D_43N, DQ7	IO, PLL_2D_T_CLKOUT1N, LVDS2D_10N, DQSN1
DDR4_DIMM_CH3_DQ38	CN10	IO, LVDS2D_43P, DQ7	IO, PLL_2D_T_CLKOUT1P, PLL_2D_T_CLKOUT1, PLL_2D_T_FB1, LVDS2D_10P, DQS1
DDR4_DIMM_CH3_DQ36	CK11	IO, LVDS2D_44N, DQ7	IO, LVDS2D_11N, DQ1
DDR4_DIMM_CH3_DQ37	CM11	IO, LVDS2D_44P, DQ7	IO, RZQ_T_2D, LVDS2D_11P, DQ1
DDR4_DIMM_CH3_TDQS_N13	CL12	IO, LVDS2D_45N, DQ7	IO, CLK_T_2D_1N, LVDS2D_12N, DQ1
DDR4_DIMM_CH3_DBI_N4	CN12	IO, LVDS2D_45P, DQ7	IO, CLK_T_2D_1P, LVDS2D_12P, DQ1
DDR4_DIMM_CH3_DQS_N4	CK13	IO, LVDS2D_46N, DQSN7	IO, CLK_T_2D_0N, LVDS2D_13N, DQ2
DDR4_DIMM_CH3_DQS_P4	CM13	IO, LVDS2D_46P, DQS7	IO, CLK_T_2D_0P, LVDS2D_13P, DQ2
DDR4_DIMM_CH3_DQ33	CL14	IO, LVDS2D_47N, DQ7	IO, LVDS2D_14N, DQ2
DDR4_DIMM_CH3_DQ32	CN14	IO, LVDS2D_47P, DQ7	IO, LVDS2D_14P, DQ2
DDR4_DIMM_CH3_DQ34	CK15	IO, LVDS2D_48N, DQ7	IO, PLL_2D_T_CLKOUT0N, LVDS2D_15N, DQ2
DDR4_DIMM_CH3_DQ35	CM15	IO, LVDS2D_48P, DQ7	IO, PLL_2D_T_CLKOUT0P, PLL_2D_T_CLKOUT0, PLL_2D_T_FB0, LVDS2D_15P, DQ2
			IO, LVDS2D_16N, DQSN2
			IO, LVDS2D_16P, DQS2
			IO, LVDS2D_17N, DQ2
			IO, LVDS2D_17P, DQ2
			IO, LVDS2D_18N, DQ2
			IO, LVDS2D_18P, DQ2
			IO, LVDS2D_19N, DQ3
			IO, LVDS2D_19P, DQ3
			IO, LVDS2D_20N, DQ3
			IO, LVDS2D_20P, DQ3
			IO, LVDS2D_21N, DQ3
			IO, LVDS2D_21P, DQ3
			IO, LVDS2D_22N, DQSN3
			IO, LVDS2D_22P, DQS3
			IO, LVDS2D_23N, DQ3
			IO, LVDS2D_23P, DQ3
			IO, LVDS2D_24N, DQ3
			IO, LVDS2D_24P, DQ3
		BOT	TOP

Bank 2D

AGFB014R24_2486A

CT3	DDR4_DIMM_CH3_CK_N1	DDRT:ERID2		
CV3	DDR4_DIMM_CH3_CK_P1	DDRT:ERID0		
CR4				
CU4	DDR4_DIMM_CH3_ALERT_N	DDRT:NC		
CT5				
CV5				
CR6				
CU6				
CT7				
CV7	DDR4_DIMM_CH3_C2	DDRT:C3		
CR8	DDR4_DIMM_CH3_CS_N3	DDRT:C2		
CU8	DDR4_DIMM_CH3_CS_N2	DDRT:C1		
CT1	DDR4_DIMM_CH3_BG0			
CV1	DDR4_DIMM_CH3_BA1			
CY3	DDR4_DIMM_CH3_BA0			
DA4	DDR4_DIMM_CH3_A17			
CY5	DDR4_DIMM_CH3_A16			
DB5	DDR4_DIMM_CH3_A15			
DA6	DDR4_DIMM_CH3_A14			
DC6	DDR4_DIMM_CH3_A13			
CY7	DDR4_DIMM_CH3_A12			
DB7	DDR4_DIMM_CH3_RZQ		240	R84
DA8	CLK_DDR4_CH3_N			
DC8	CLK_DDR4_CH3_P			
CR10	DDR4_DIMM_CH3_A11			
CU10	DDR4_DIMM_CH3_A10			
CT11	DDR4_DIMM_CH3_A9			
CV11	DDR4_DIMM_CH3_A8			
CR12	DDR4_DIMM_CH3_A7			
CU12	DDR4_DIMM_CH3_A6			
CT13	DDR4_DIMM_CH3_A5			
CV13	DDR4_DIMM_CH3_A4			
CR14	DDR4_DIMM_CH3_A3			
CU14	DDR4_DIMM_CH3_A2			
CT15	DDR4_DIMM_CH3_A1			
CV15	DDR4_DIMM_CH3_A0			
DA10	DDR4_DIMM_CH3_PAR			
DC10	DDR4_DIMM_CH3_CS_N1	DDRT:GNT0		
CY11	DDR4_DIMM_CH3_CK_N0			
DB11	DDR4_DIMM_CH3_CK_P0			
DA12	DDR4_DIMM_CH3_CKE1	DDRT:REQ		
DC12	DDR4_DIMM_CH3_CKE0			
CY13	DDR4_DIMM_CH3_ODT1	DDRT:ERR		
DB13	DDR4_DIMM_CH3_ODT0			
DA14	DDR4_DIMM_CH3_ACT_N			
DC14	DDR4_DIMM_CH3_CS_N0			
CY15	DDR4_DIMM_CH3_RESET_N			
DB15	DDR4_DIMM_CH3_BG1			

CLK_DDR4_CH3_P R85 DNI CLK_DDR4_CH3_N

18	DDR4_DIMM_CH3_CK_P[1:0]
18	DDR4_DIMM_CH3_CK_N[1:0]
18	DDR4_DIMM_CH3_CKE[1:0]
18	DDR4_DIMM_CH3_A[17:0]
18	DDR4_DIMM_CH3_ODT[1:0]
18	DDR4_DIMM_CH3_BG[1:0]
18	DDR4_DIMM_CH3_BA[1:0]
18	DDR4_DIMM_CH3_CS_N[3:0]
18	DDR4_DIMM_CH3_RESET_N
18	DDR4_DIMM_CH3_ACT_N
18	DDR4_DIMM_CH3_PAR
18	DDR4_DIMM_CH3_ALERT_N
18	DDR4_DIMM_CH3_C2

18,19	DDR4_DIMM_CH3_DBI_N[8:0]
18,19	DDR4_DIMM_CH3_DQ[71:0]
18,19	DDR4_DIMM_CH3_DQS_P[8:0]
18,19	DDR4_DIMM_CH3_DQS_N[8:0]
18,19	DDR4_DIMM_CH3_TDQS_N[17:9]

Intel Corporation,101 innovation Dr, San Jose, CA 95134

Title: AgileX F-Series FPGA Dev Kit_Enpirion

Copyright (c) 2014, Intel Corporation. All Rights Reserved.

Size: B | Document Number: K57065-001-A | Rev: A0

Date: Friday, January 10, 2020 | Sheet 20 of 66

E-TILE BANK 9A

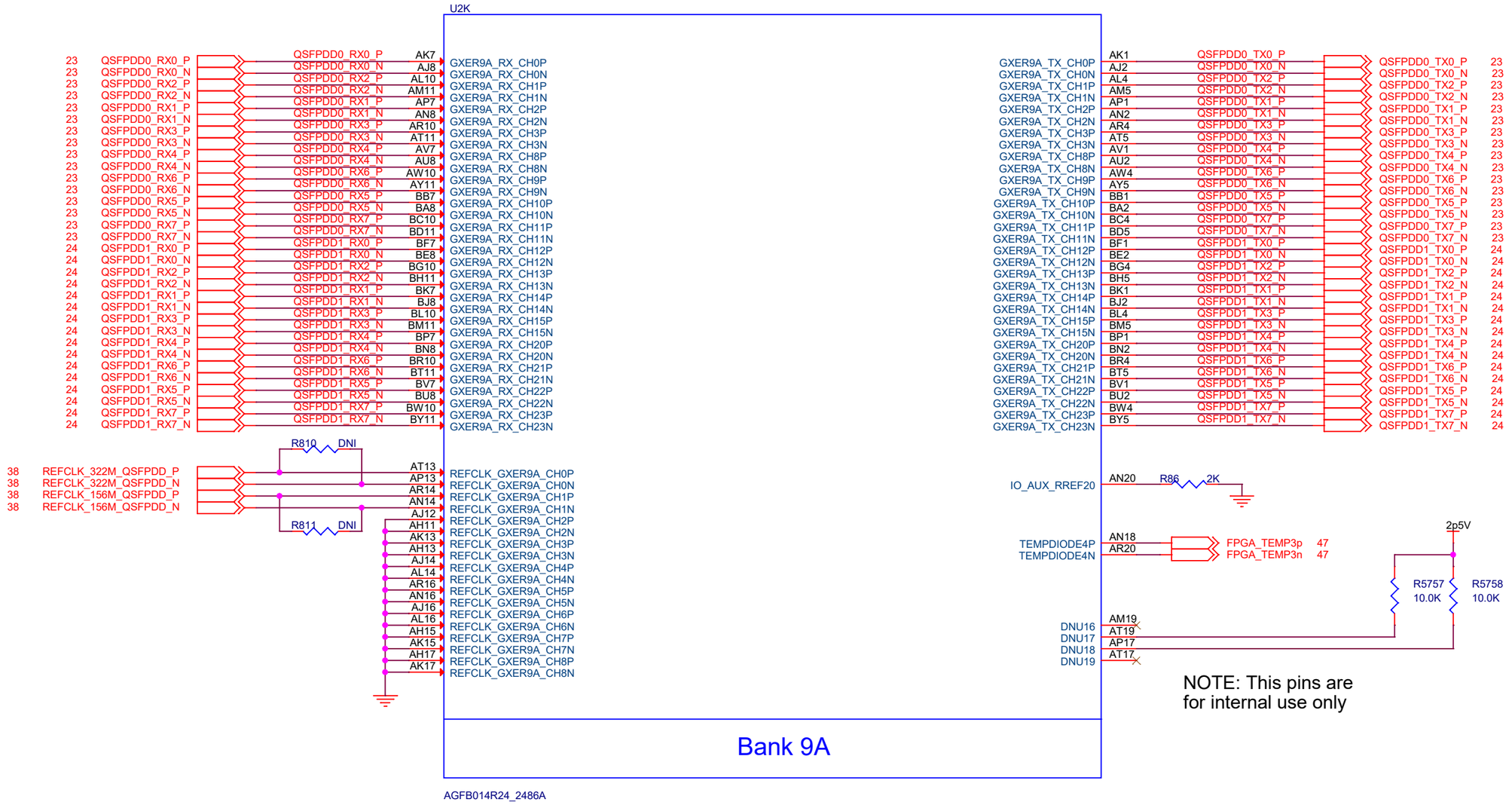

Intel Corporation,101 innovation Dr, San Jose, CA 95134

Title: AgileX F-Series FPGA Dev Kit_Enpirion

Copyright (c) 2014, Intel Corporation. All Rights Reserved.

Size	Document Number	Rev
B	K57065-001-A	A0

Date: Friday, January 10, 2020 Sheet 21 of 66

P-TILE BANK 10A

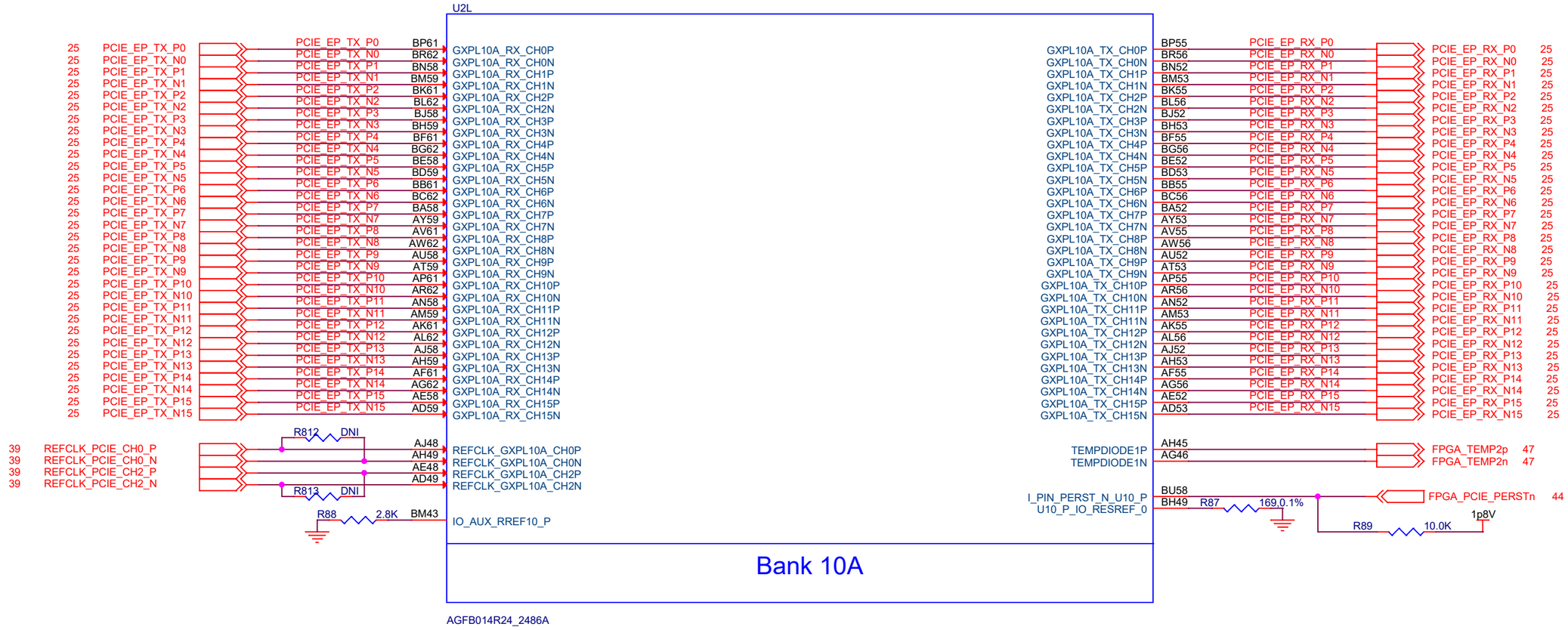

Intel Corporation,101 innovation Dr, San Jose, CA 95134

Title: AgileX F-Series FPGA Dev Kit_Enpirion

Copyright (c) 2014, Intel Corporation. All Rights Reserved.

Size	Document Number	Rev
B	K57065-001-A	A0

Date: Friday, January 10, 2020 Sheet 22 of 66

QSFPDD0

NOTE 1: Bypass Capacitors should be placed as close to the associated 20-pin connector as possible.

NOTE 2: zQSFP 100-ohm termination is implemented via the FPGA on-chip termination.

NOTE 3: DC blocking capacitors are in the module for RX and TX.

NOTE 4: 1uH inductors should have a DC Resistance of less than 0.1-ohm.

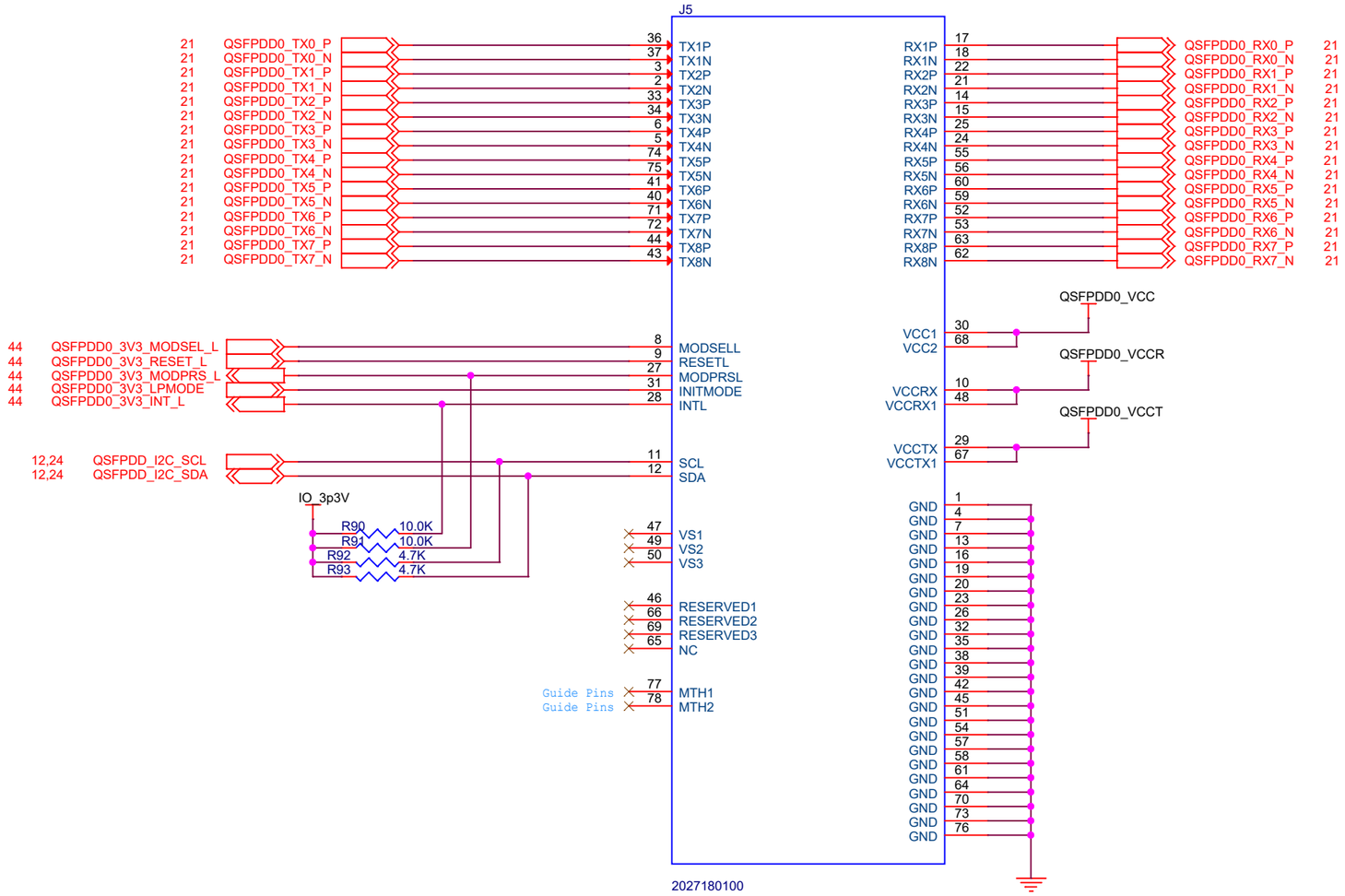

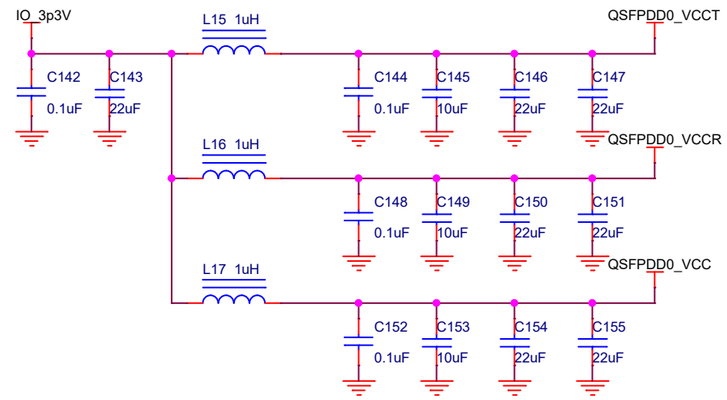

Place close to QSFPDD Connector

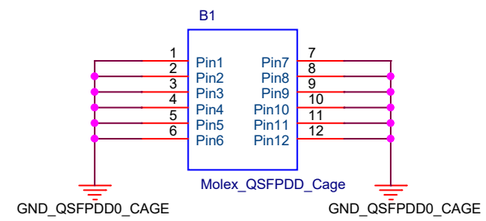

MOLEX MPN 2031431355

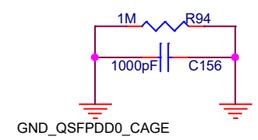

Intel Corporation, 101 Innovation Dr., San Jose CA 95134
Copyright (c) 2016, Intel Corporation. All Rights Reserved.

Title: AgileX F-Series FPGA Dev Kit_Enpirion

Size	Document Number	Rev
B	K57065-001-A	A0

Date: Friday, January 10, 2020 Sheet 23 of 66

QSFPDD1

NOTE 1: Bypass Capacitors should be placed as close to the associated 20-pin connector as possible.

NOTE 2: zQSFP 100-ohm termination is implemented via the FPGA on-chip termination.

NOTE 3: DC blocking capacitors are in the module for RX and TX.

NOTE 4: 1uH inductors should have a DC Resistance of less than 0.1-ohm.

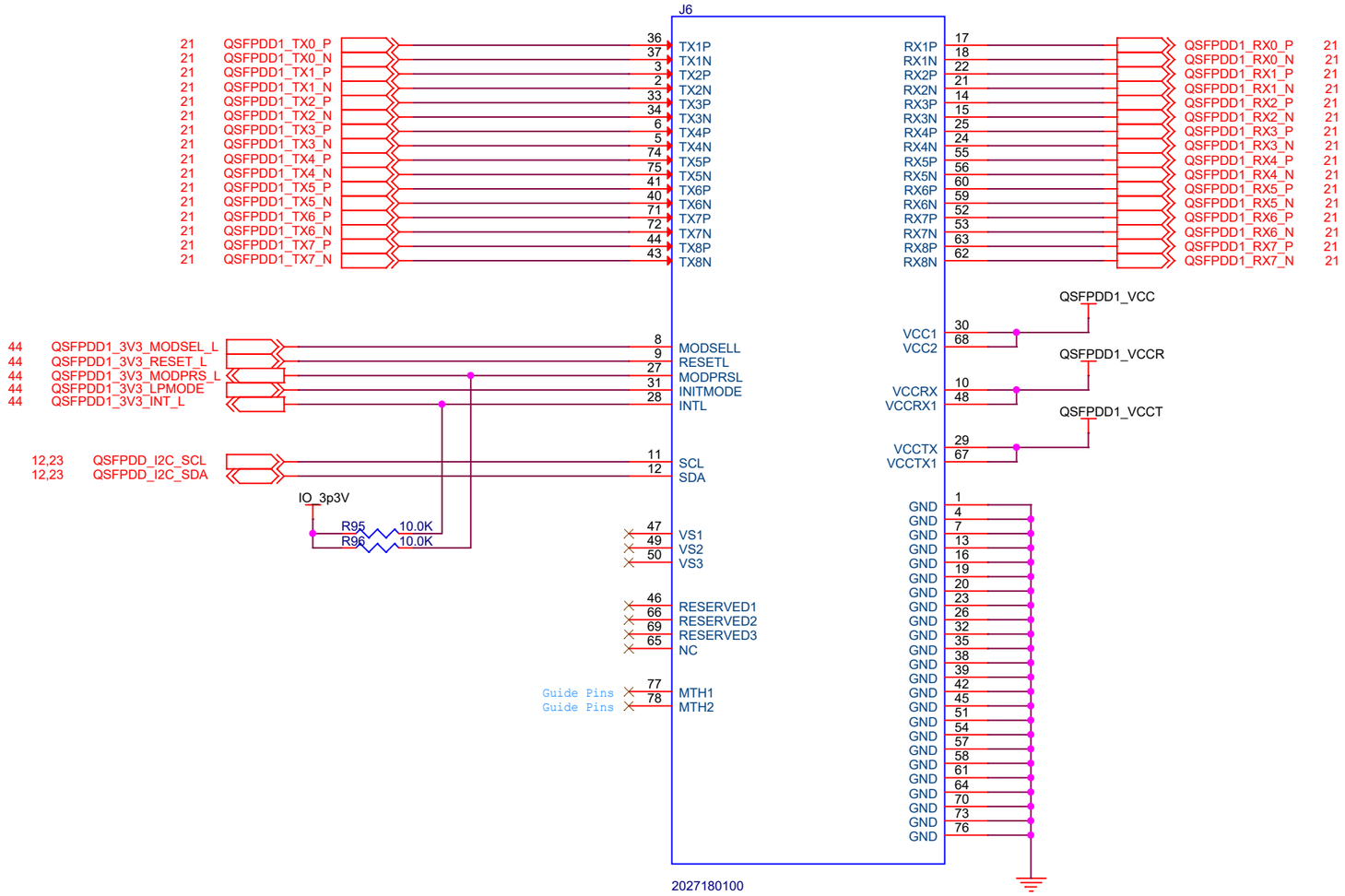

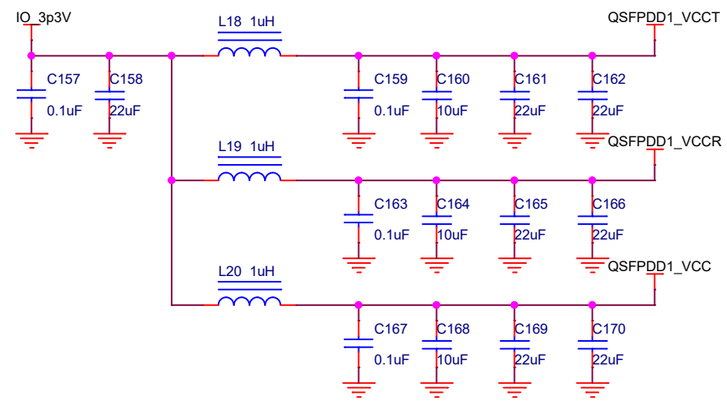

Place close to QSFPDD Connector

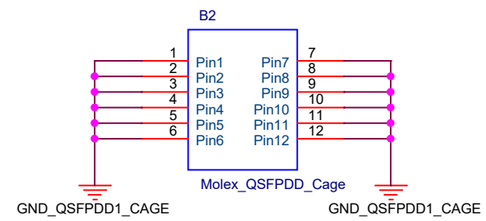

MOLEX MPN 2031431355

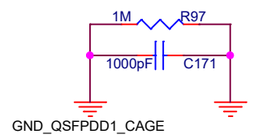

Intel Corporation, 101 Innovation Dr., San Jose CA 95134
Copyright (c) 2016, Intel Corporation. All Rights Reserved.

Title: AgileX F-Series FPGA Dev Kit_Enpirion

Size	Document Number	Rev
B	K57065-001-A	A0

Date: Friday, January 10, 2020 Sheet 24 of 66

PCIe Endpoint Edge Connector

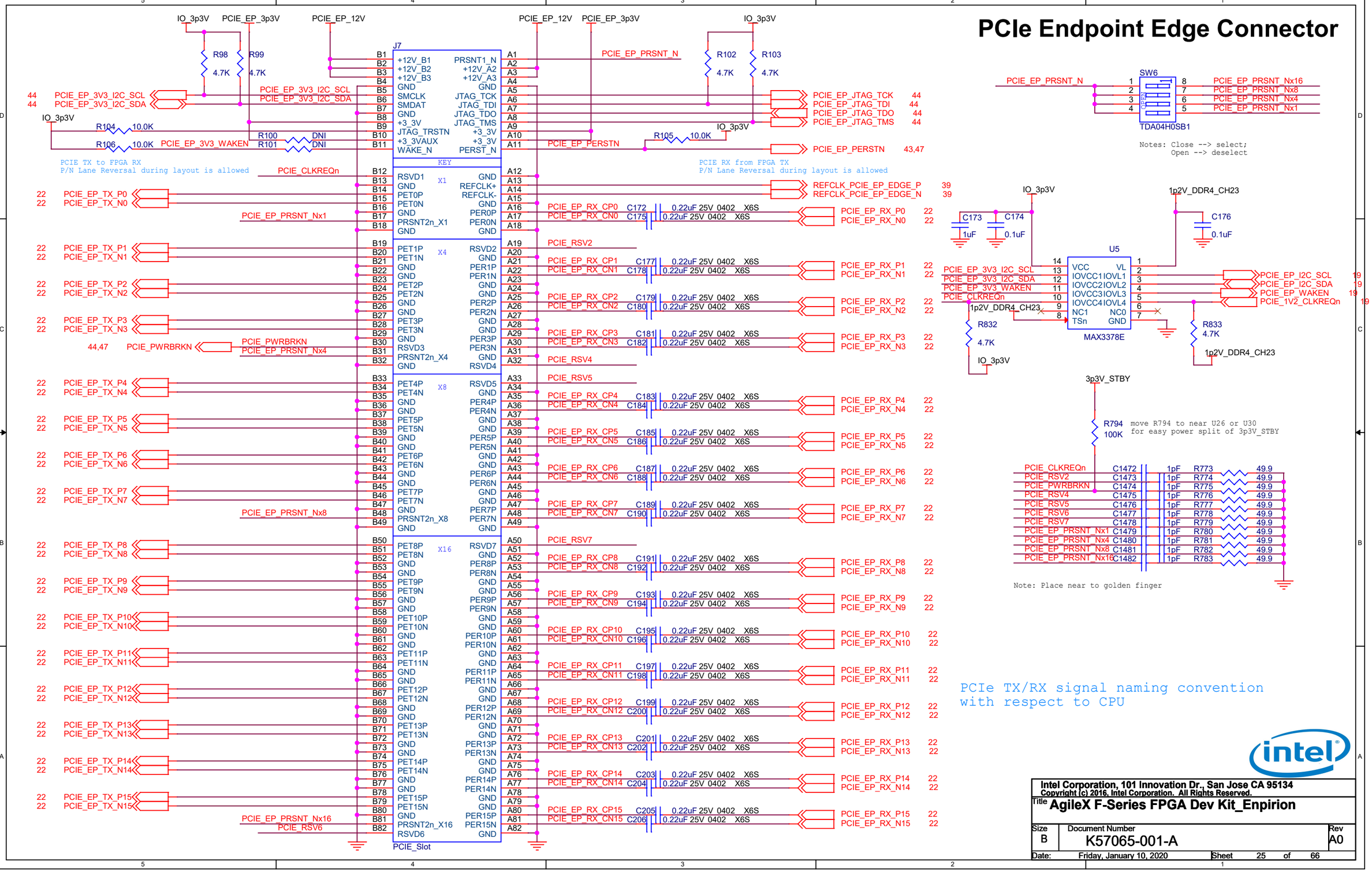

Intel Corporation, 101 Innovation Dr., San Jose CA 95134
Copyright (c) 2016, Intel Corporation. All Rights Reserved.

Title: AgileX F-Series FPGA Dev Kit_Enpirion

Size	Document Number	Rev
B	K57065-001-A	A0

Date: Friday, January 10, 2020 Sheet 25 of 66

SDM & Configuration

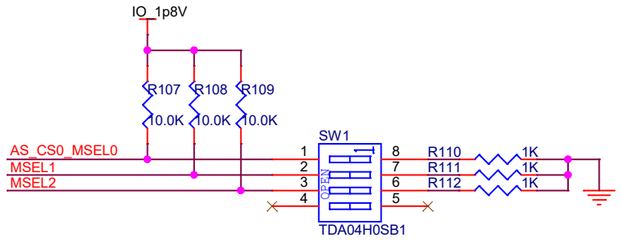

Config Mode	MSEL2	MSEL1	MSEL0
AS_FAST	0	0	1
AS_NORMAL	0	1	1

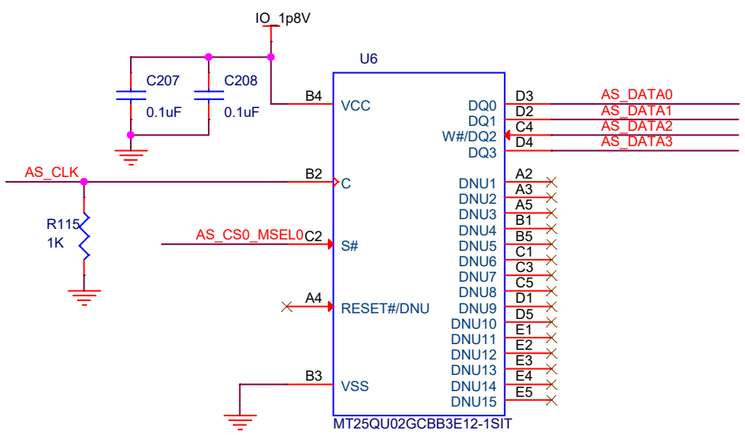

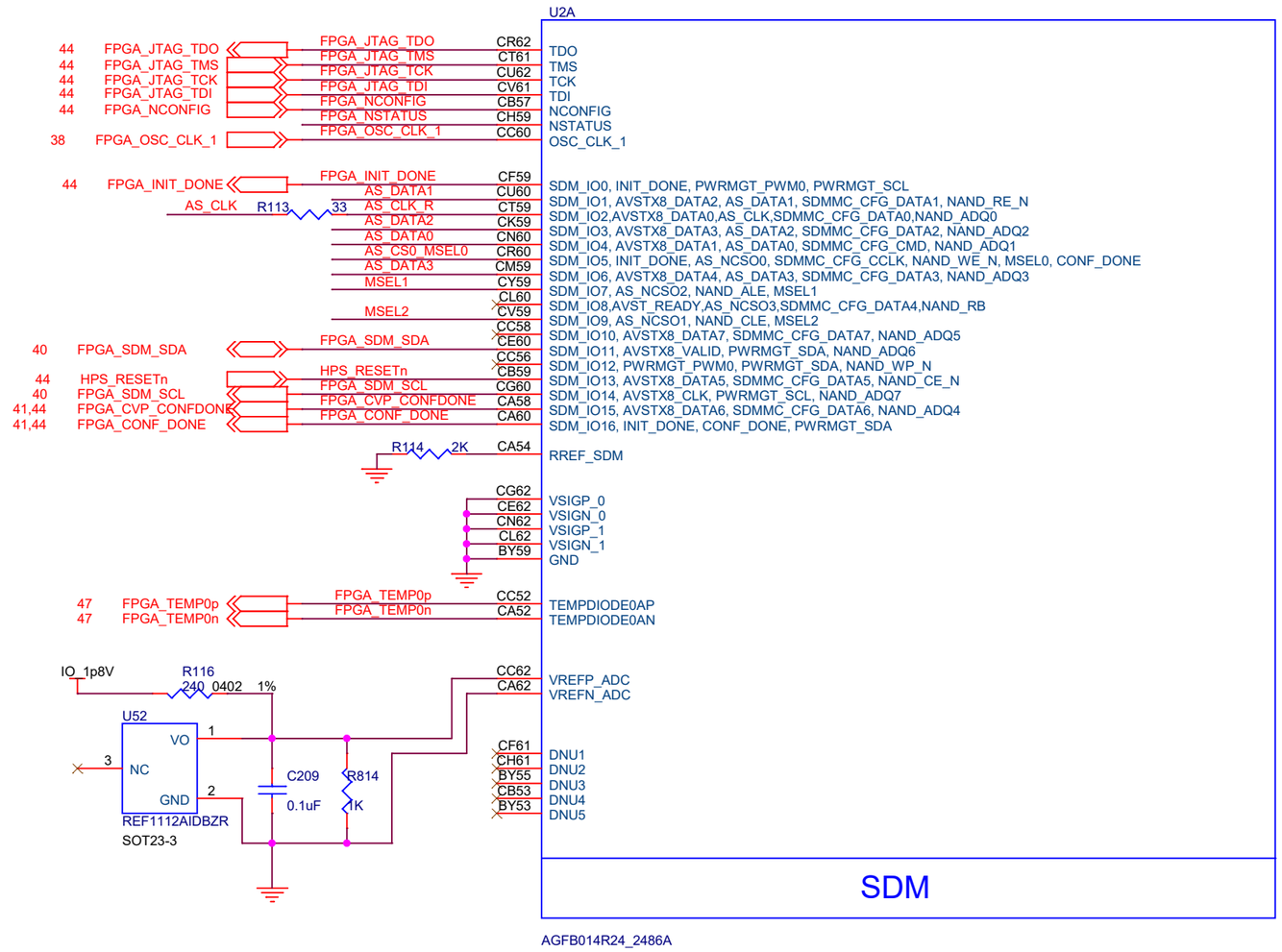

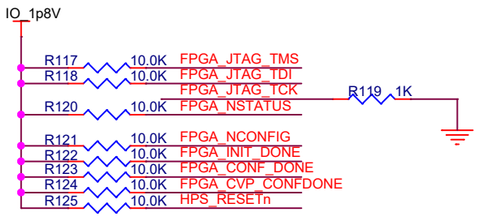

Intel Corporation,101 innovation Dr, San Jose, CA 95134

Title: AgileX F-Series FPGA Dev Kit_Enpirion

Copyright (c) 2014, Intel Corporation. All Rights Reserved.

Size: B | Document Number: K57065-001-A | Rev: A0

Date: Friday, January 10, 2020 | Sheet 26 of 66

Bank HPS

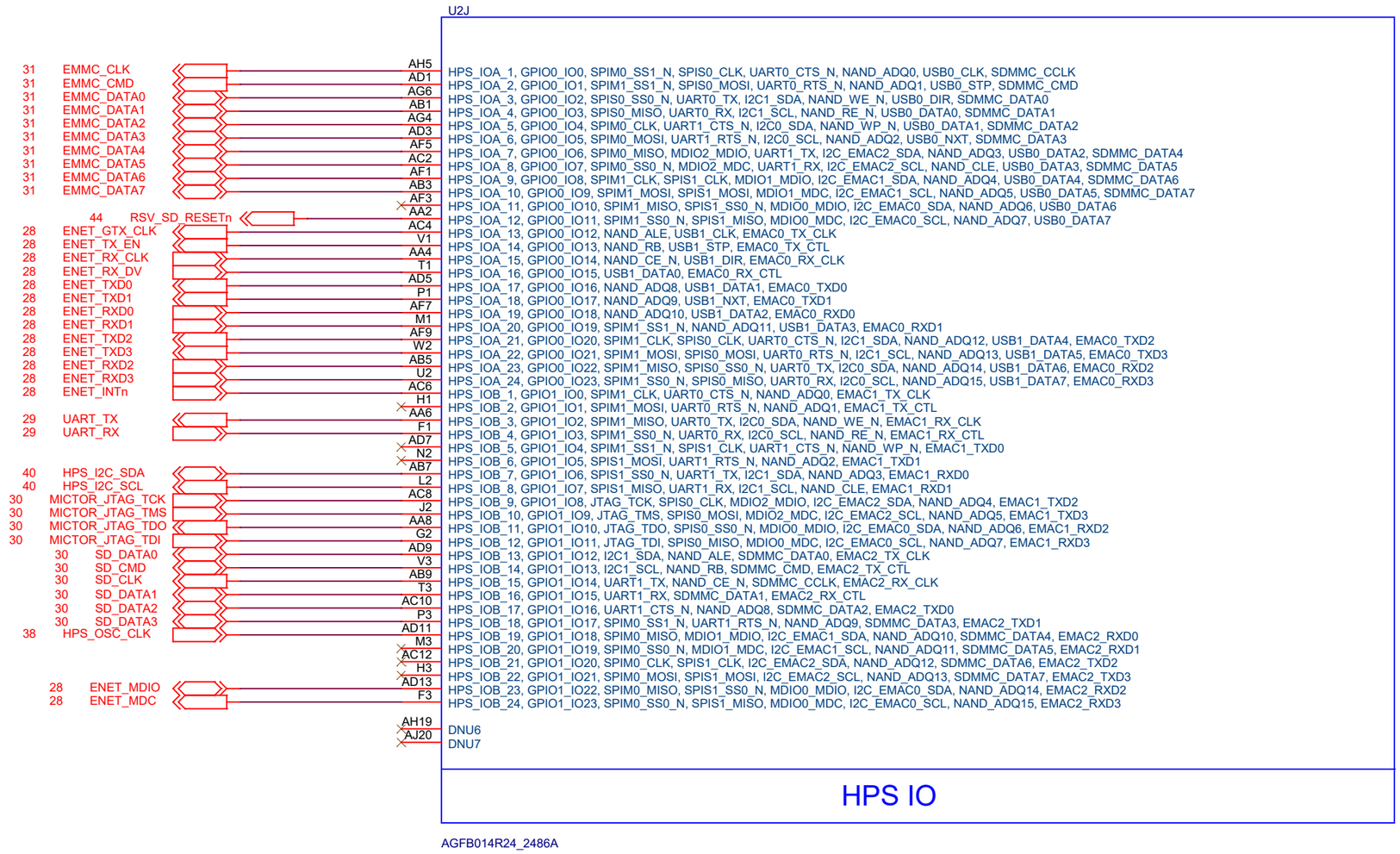

Intel Corporation,101 innovation Dr, San Jose, CA 95134

Title: AgileX F-Series FPGA Dev Kit_Enpirion

Copyright (c) 2014, Intel Corporation. All Rights Reserved.

Size	Document Number	Rev
B	K57065-001-A	A0

Date: Friday, January 10, 2020 Sheet 27 of 66

10/100/1000 Ethernet - HPS

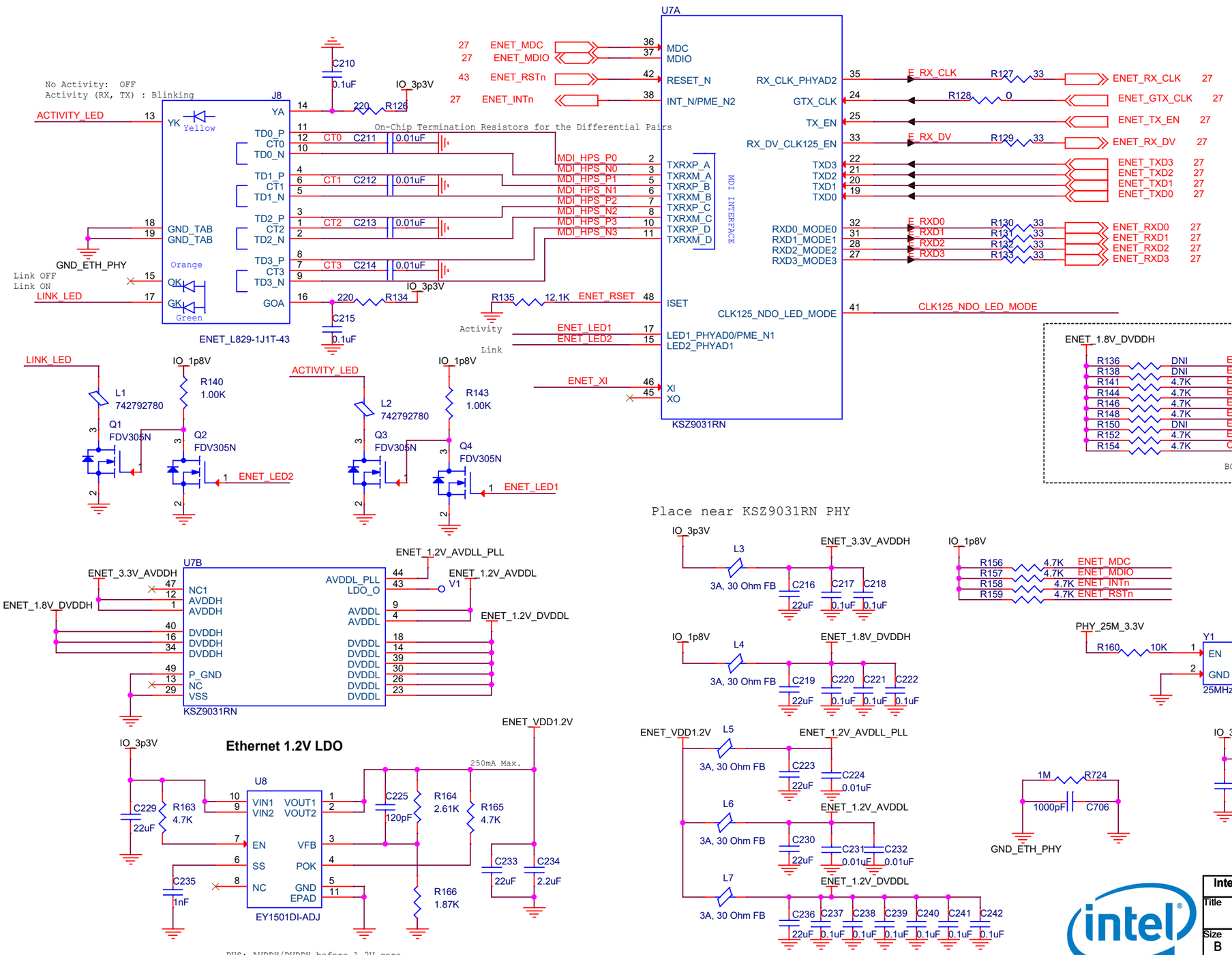

Ethernet Interface

NAME	Pin	Value	Description
PHYAD2	35	1	ID = b"100"
PHYAD1	15	0	
PHYAD0	17	0	
MODE3	27	1	RGMII (10/100/1000 half-/full-duplex)
MODE2	28	1	
MODE1	31	1	
MODE0	32	1	
C1K125 EN	33	0	No clockoutput from pin41
LED MODE	41	1	single led mode

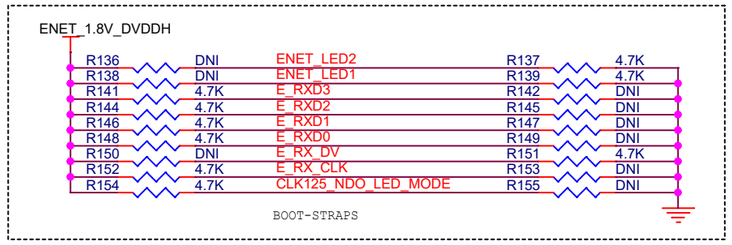

Place near KSZ9031RN PHY

Ethernet 1.2V LDO

PUS: AVDDH/DVDDH before 1.2V core

Intel Corporation,101 innovation Dr, San Jose, CA 95134

Title: AgileX F-Series FPGA Dev Kit_Enpirion

Copyright (c) 2014, Intel Corporation. All Rights Reserved.

Size: B | Document Number: K57065-001-A | Rev: A0

Date: Friday, January 10, 2020 | Sheet 28 of 66

USB-UART Port

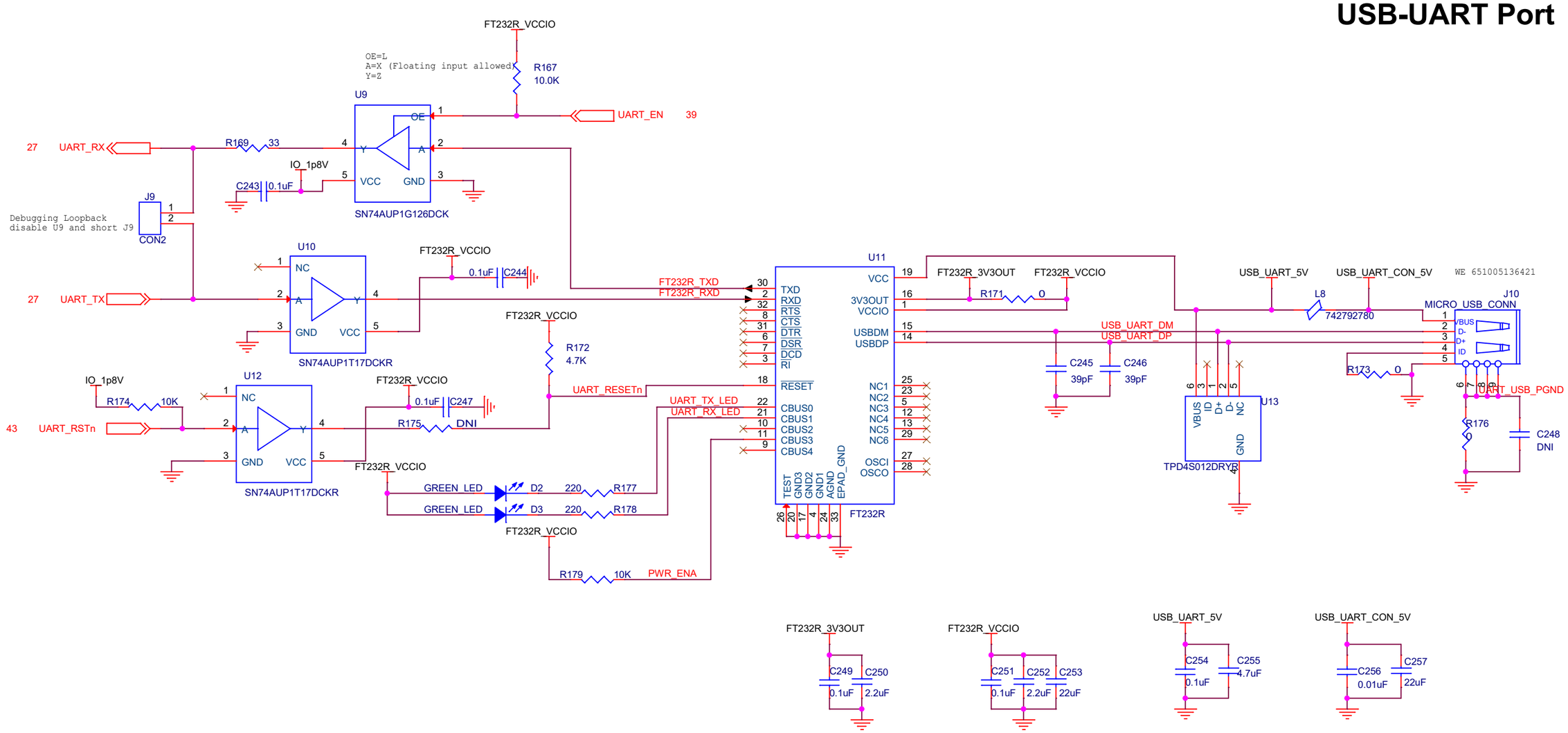

Intel Corporation,101 innovation Dr, San Jose, CA 95134

Title: AgileX F-Series FPGA Dev Kit_Enpirion

Copyright (c) 2014, Intel Corporation. All Rights Reserved.

Size	Document Number	Rev
B	K57065-001-A	A0

Date: Friday, January 10, 2020 Sheet 29 of 66

MicroSD Card

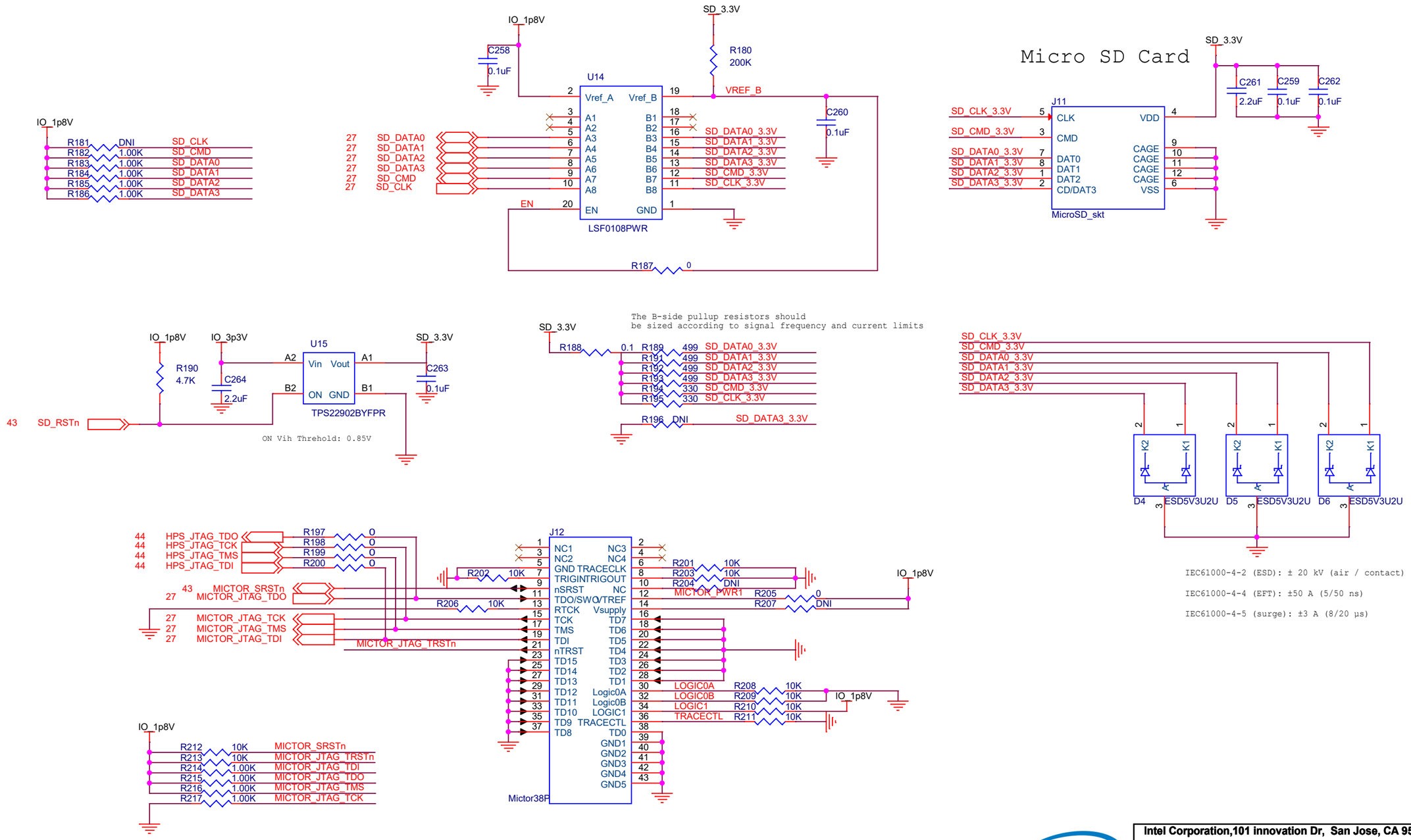

Intel Corporation,101 innovation Dr, San Jose, CA 95134

Title: **AgileX F-Series FPGA Dev Kit_Enpirion**

Copyright (c) 2014, Intel Corporation. All Rights Reserved.

Size	Document Number	Rev
B	K57065-001-A	A0

Date: Friday, January 10, 2020 Sheet 30 of 66

eMMC

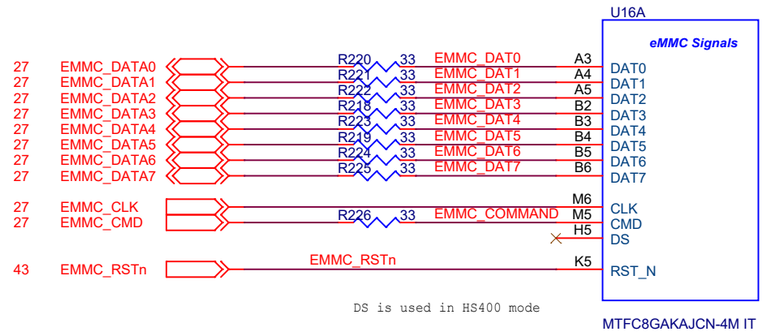

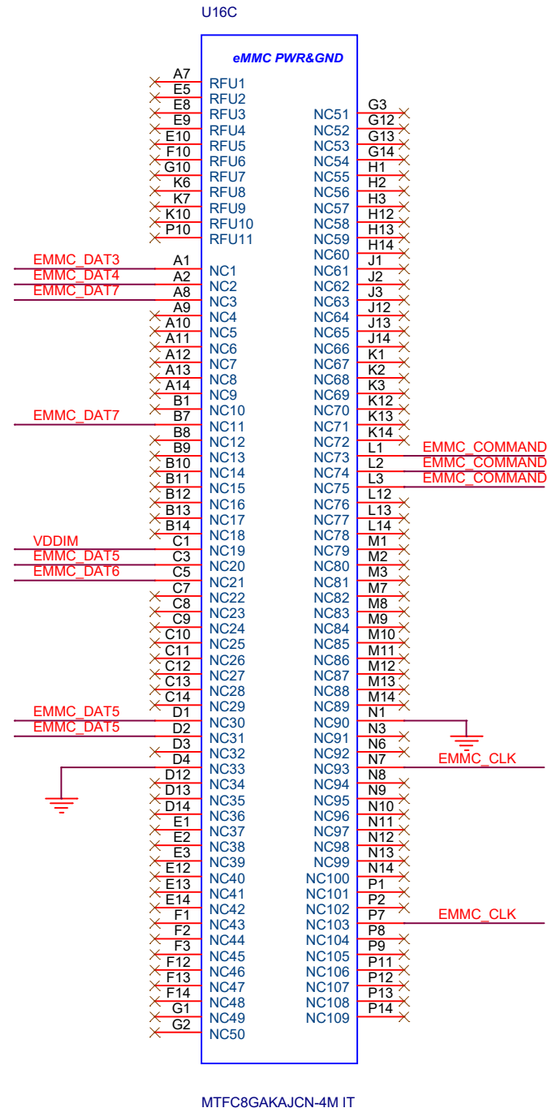

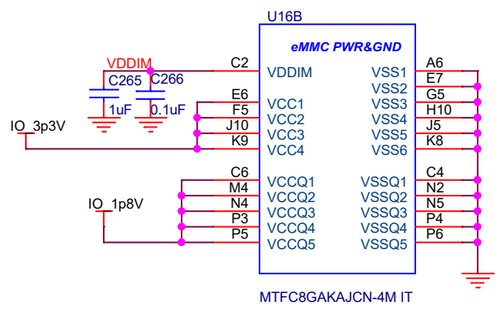

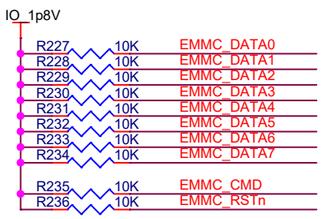

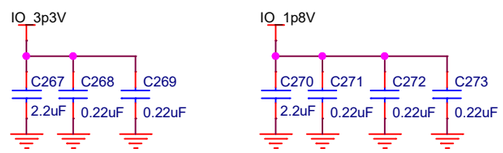

Intel Corporation,101 innovation Dr, San Jose, CA 95134

Title: AgileX F-Series FPGA Dev Kit_Enpirion

Copyright (c) 2014, Intel Corporation. All Rights Reserved.

Size	Document Number	Rev
B	K57065-001-A	A0

Date: Friday, January 10, 2020 Sheet 31 of 66

Bank NC/DNU

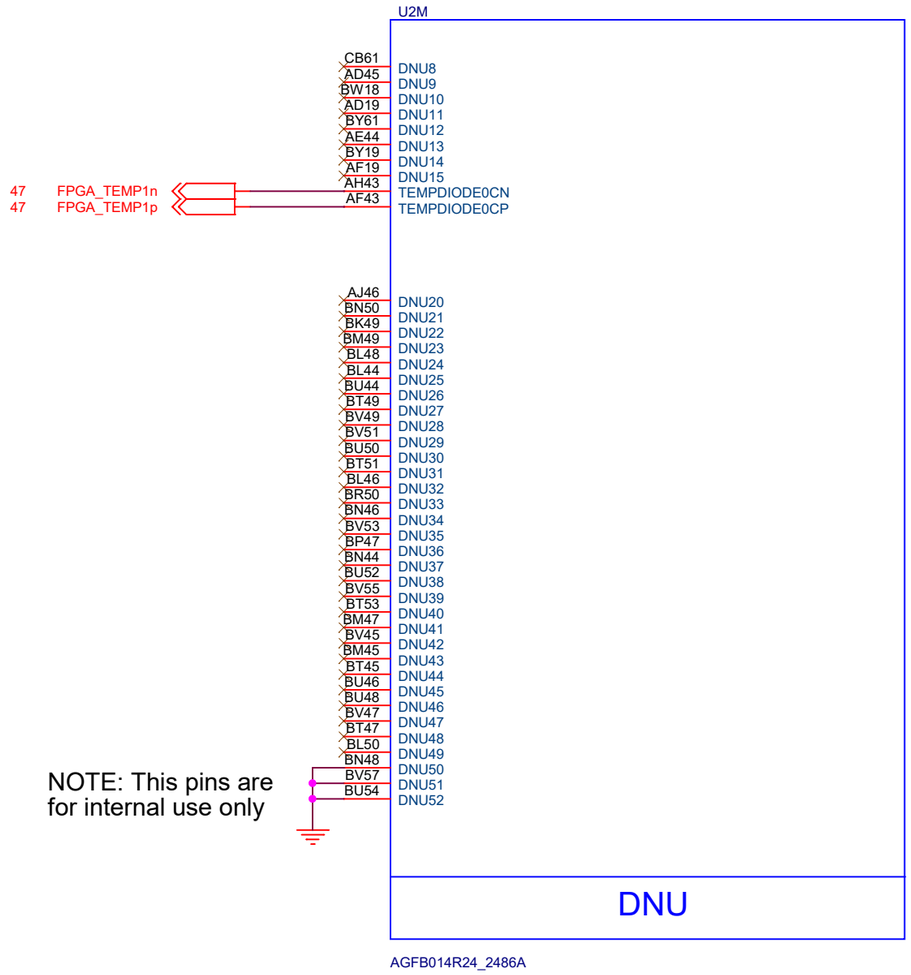

NOTE: This pins are for internal use only

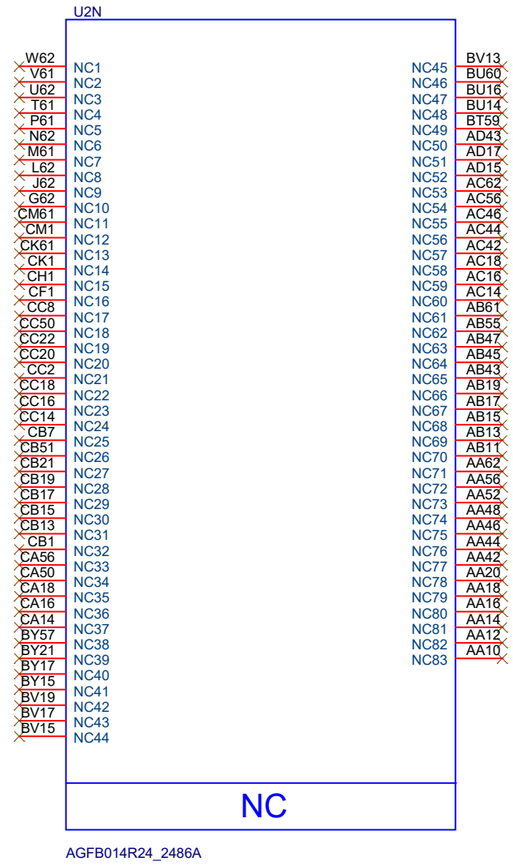

Intel Corporation,101 innovation Dr, San Jose, CA 95134

Title: AgileX F-Series FPGA Dev Kit_Enpirion

Copyright (c) 2014, Intel Corporation. All Rights Reserved.

Size	Document Number	Rev
B	K57065-001-A	A0

Date: Friday, January 10, 2020 Sheet 32 of 66

FPGA Power 1

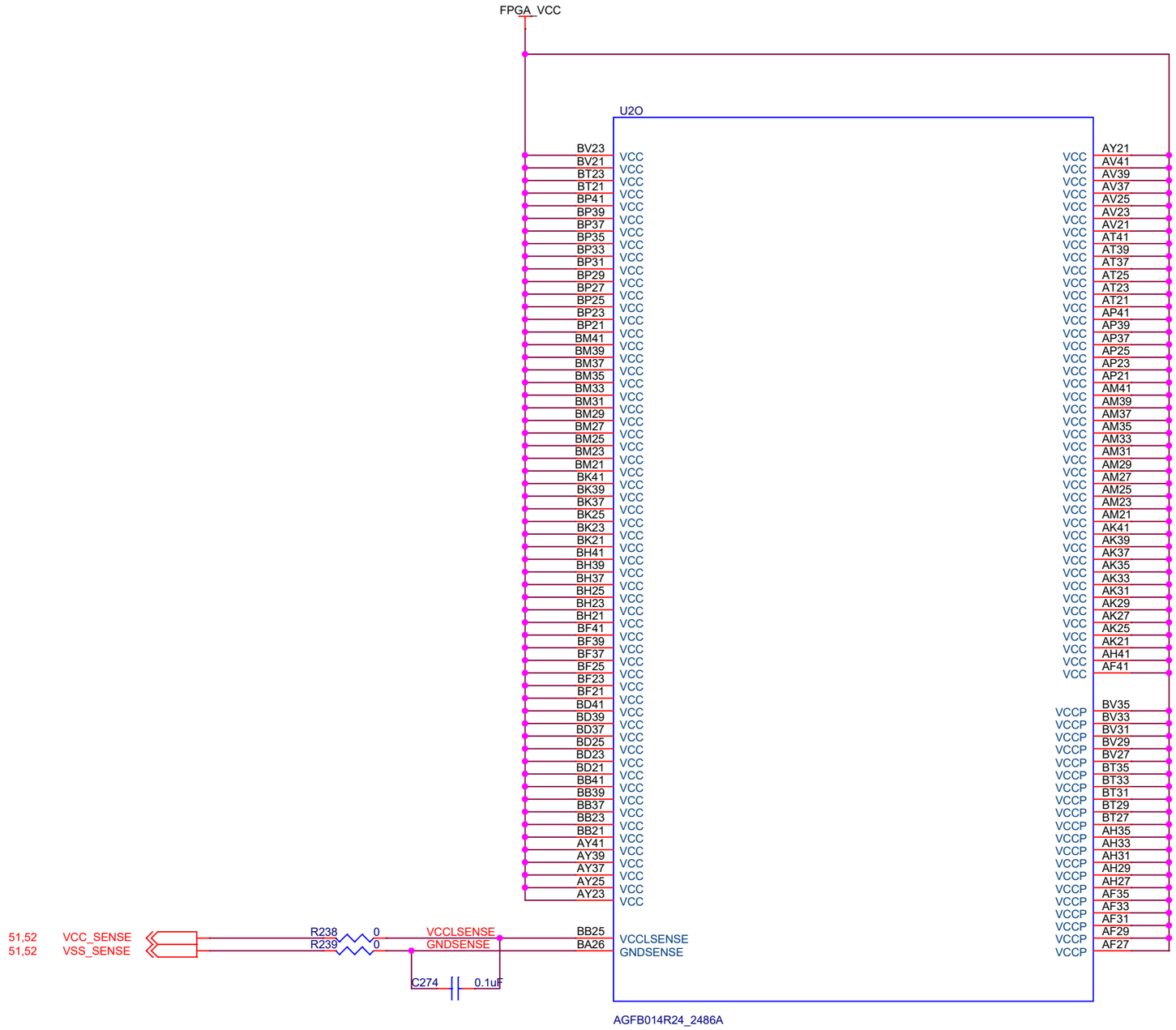

Intel Corporation,101 innovation Dr, San Jose, CA 95134	
Title	AgileX F-Series FPGA Dev Kit_Enpirion
	Copyright (c) 2014, Intel Corporation. All Rights Reserved.
Size B	Document Number K57065-001-A — Rev A0
Date: Friday, January 10, 2020	Sheet 33 of 66

FPGA Power 2

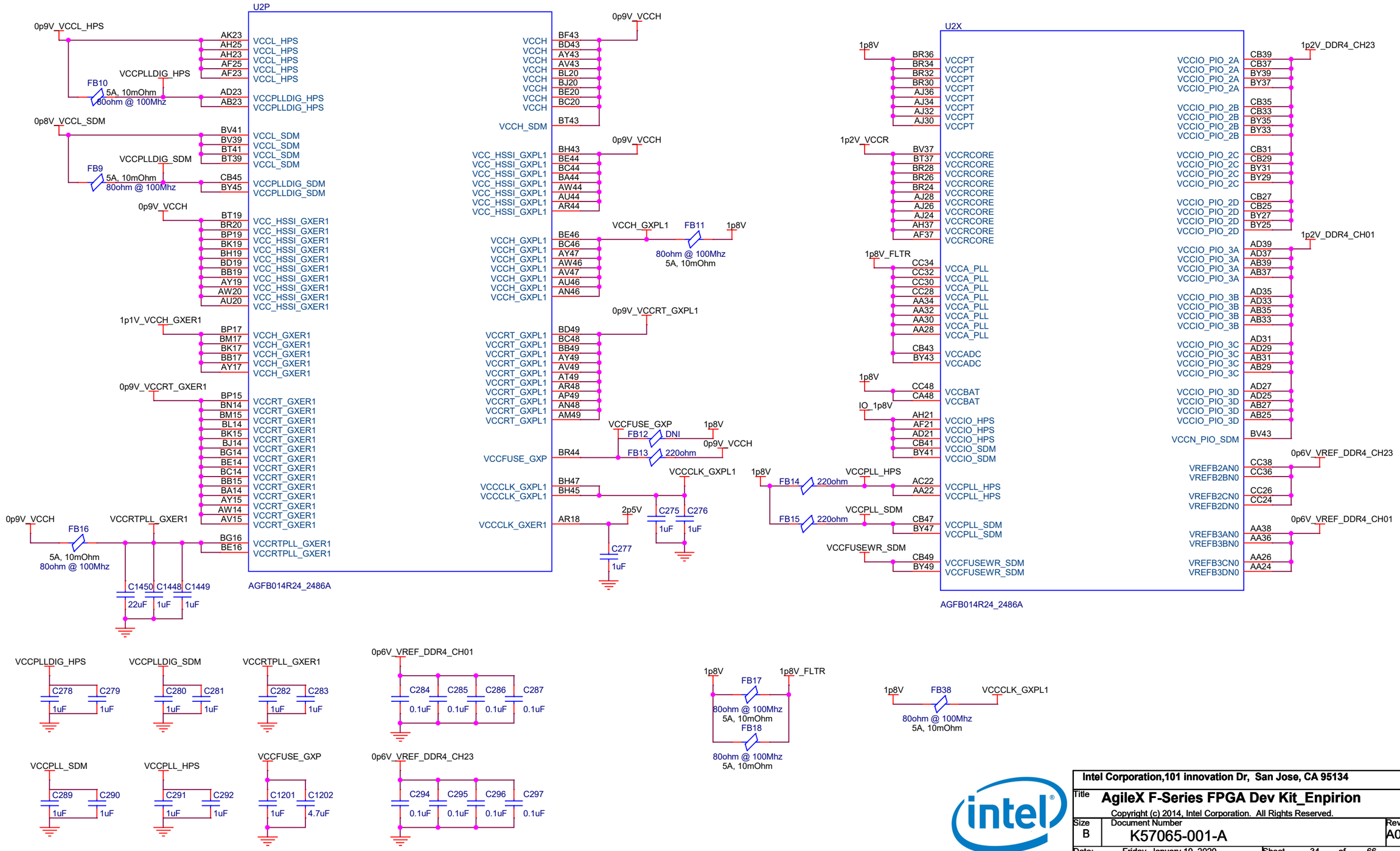

Intel Corporation,101 innovation Dr, San Jose, CA 95134

Title: AgileX F-Series FPGA Dev Kit_Enpirion

Copyright (c) 2014, Intel Corporation. All Rights Reserved.

Size	Document Number	Rev
B	K57065-001-A	A0

Date: Friday, January 10, 2020 Sheet 34 of 66

FPGA GND 1

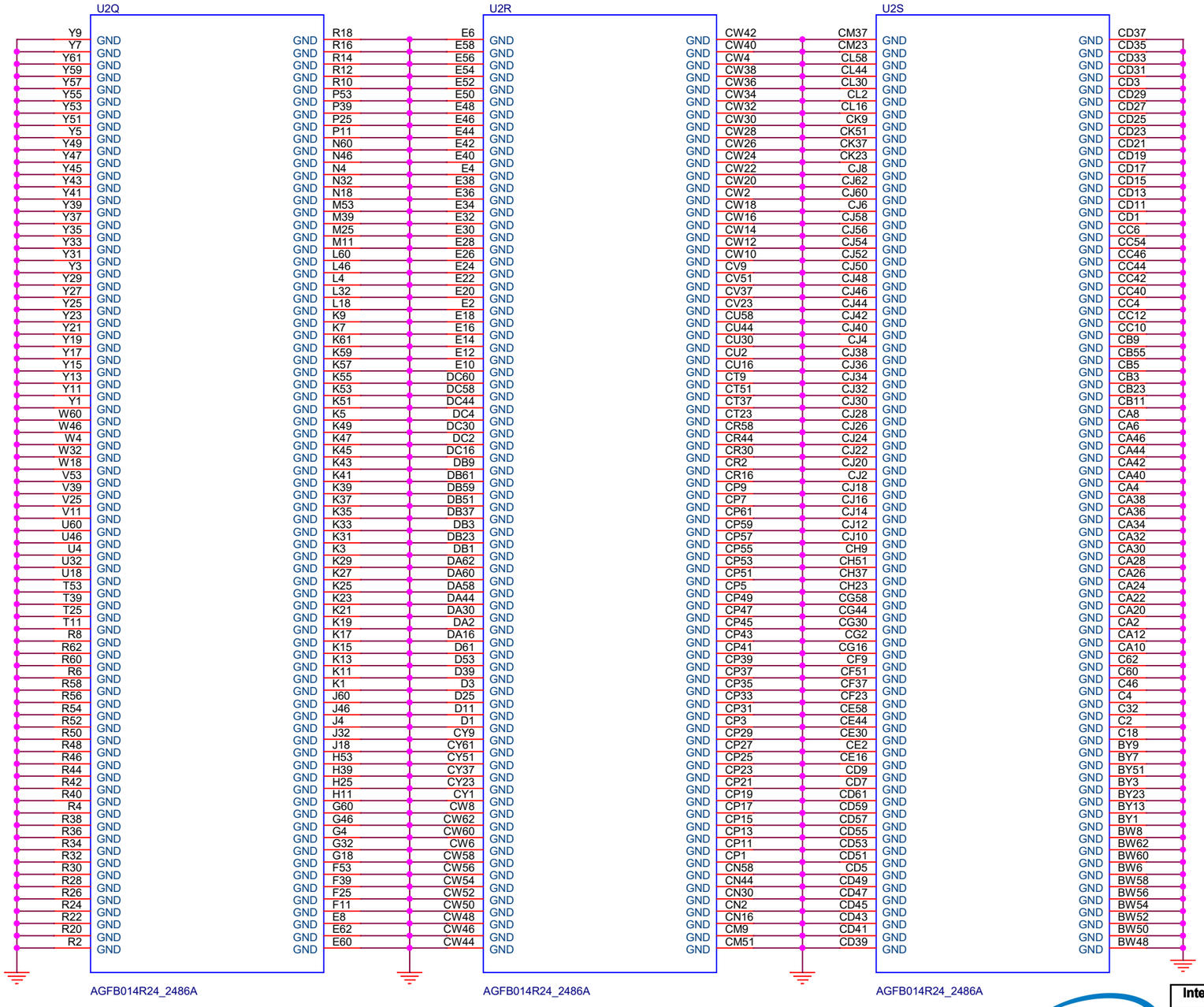

Intel Corporation,101 innovation Dr, San Jose, CA 95134

Title: AgileX F-Series FPGA Dev Kit_Enpirion

Copyright (c) 2014, Intel Corporation. All Rights Reserved.

Size	Document Number	Rev
B	K57065-001-A	A0

Date: Friday, January 10, 2020 Sheet 35 of 66

FPGA GND 2

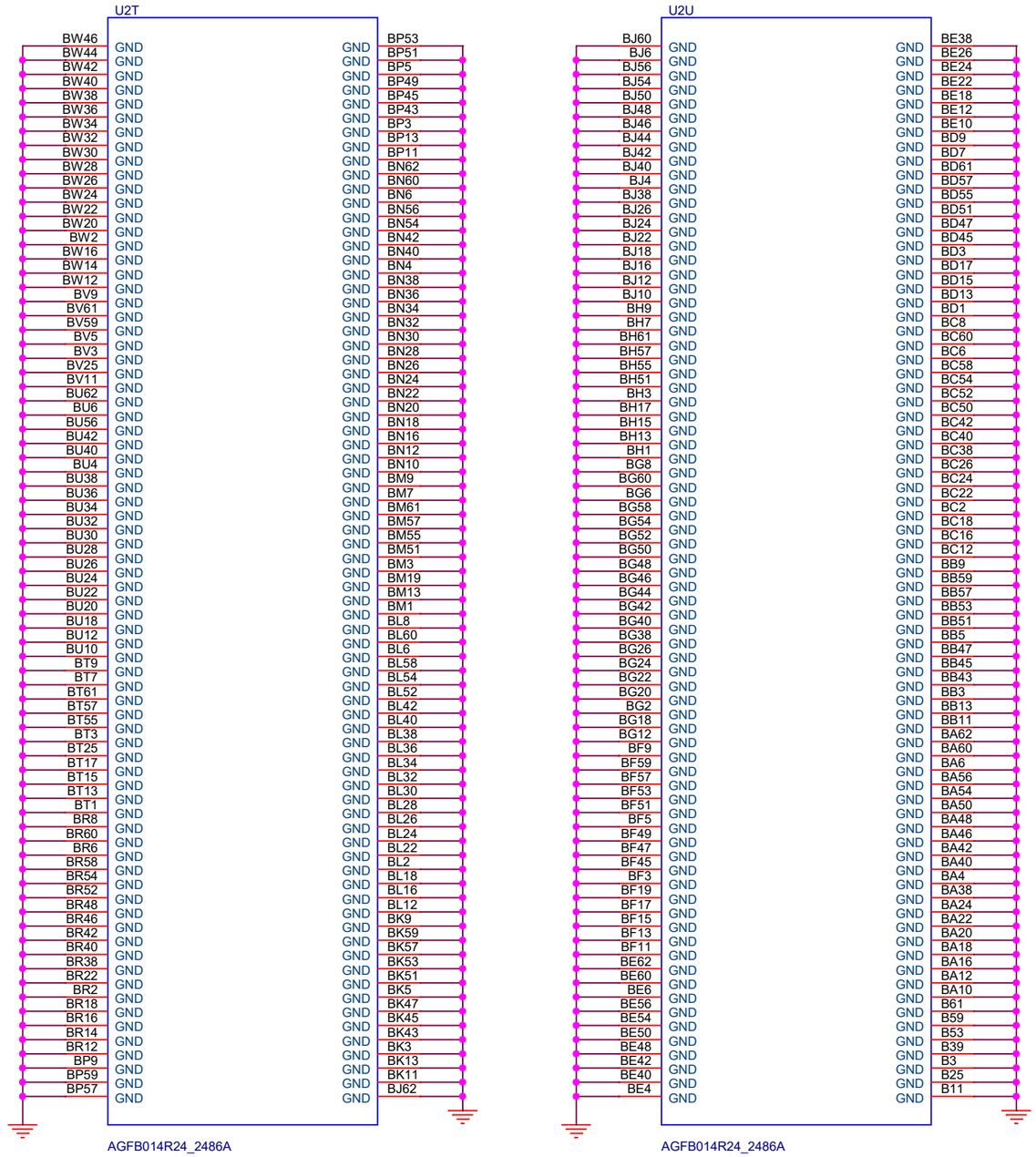

Intel Corporation,101 innovation Dr, San Jose, CA 95134

Title **AgileX F-Series FPGA Dev Kit_Enpirion**

Copyright (c) 2014, Intel Corporation. All Rights Reserved.

Size	Document Number	Rev
B	K57065-001-A	A0

Date: Friday, January 10, 2020 Sheet 36 of 66

FPGA GND 3

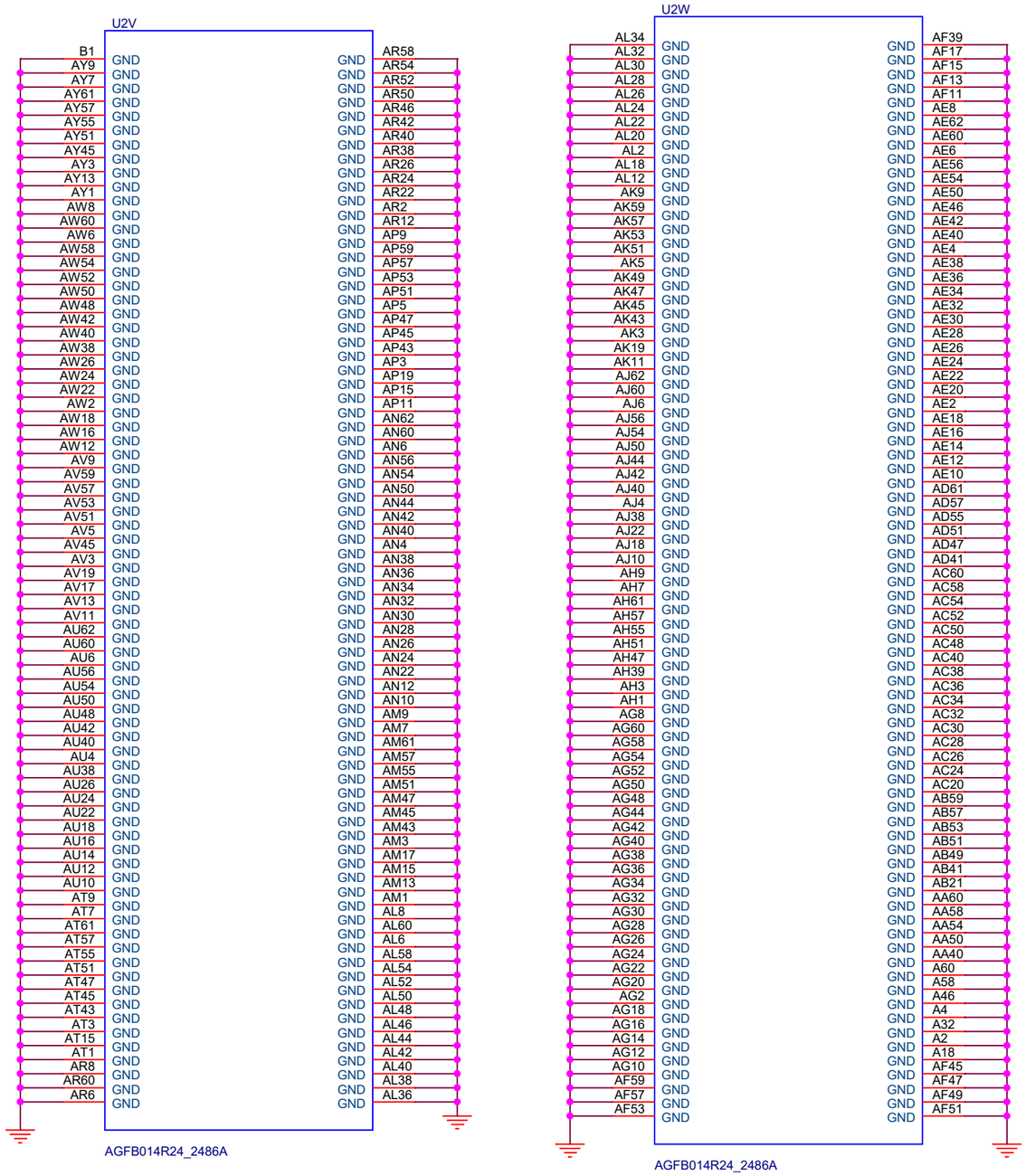

Intel Corporation,101 innovation Dr, San Jose, CA 95134

Title: AgileX F-Series FPGA Dev Kit_Enpirion

Copyright (c) 2014, Intel Corporation. All Rights Reserved.

Size	Document Number	Rev
B	K57065-001-A	A0

Date: Friday, January 10, 2020 Sheet 37 of 66

Clock 1

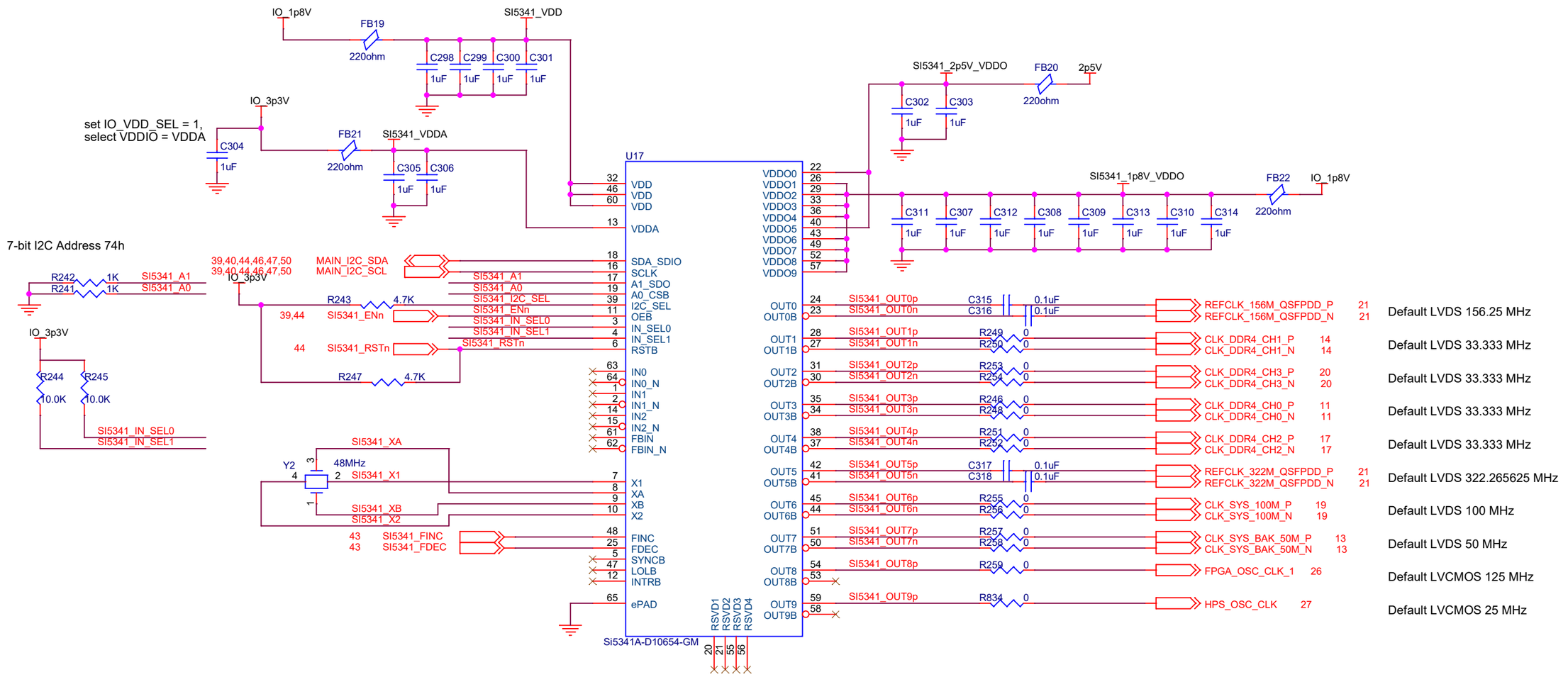

Intel Corporation,101 innovation Dr, San Jose, CA 95134

Title: AgileX F-Series FPGA Dev Kit_Enpirion

Copyright (c) 2014, Intel Corporation. All Rights Reserved.

Size	Document Number	Rev
B	K57065-001-A	A0

Date: Friday, January 10, 2020 Sheet 38 of 66

Clock 2

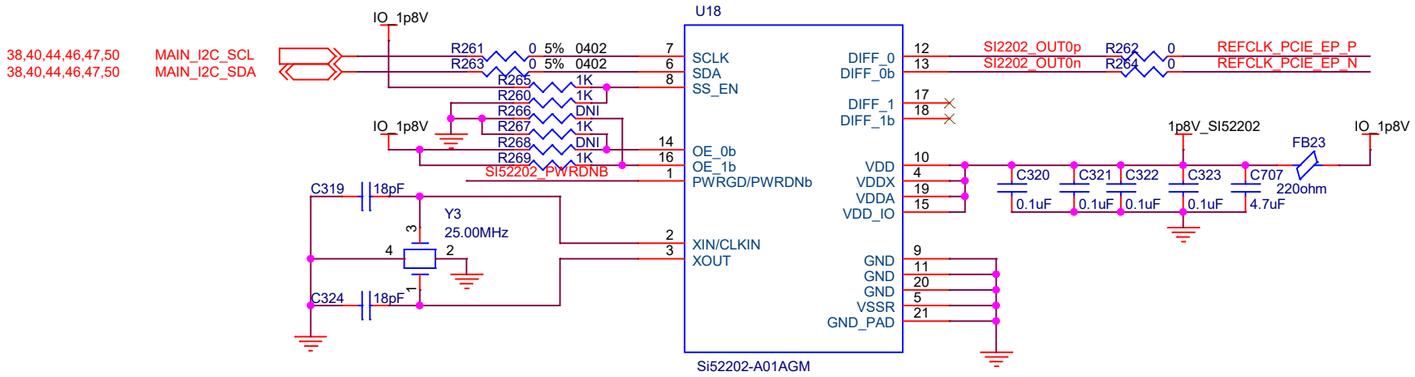

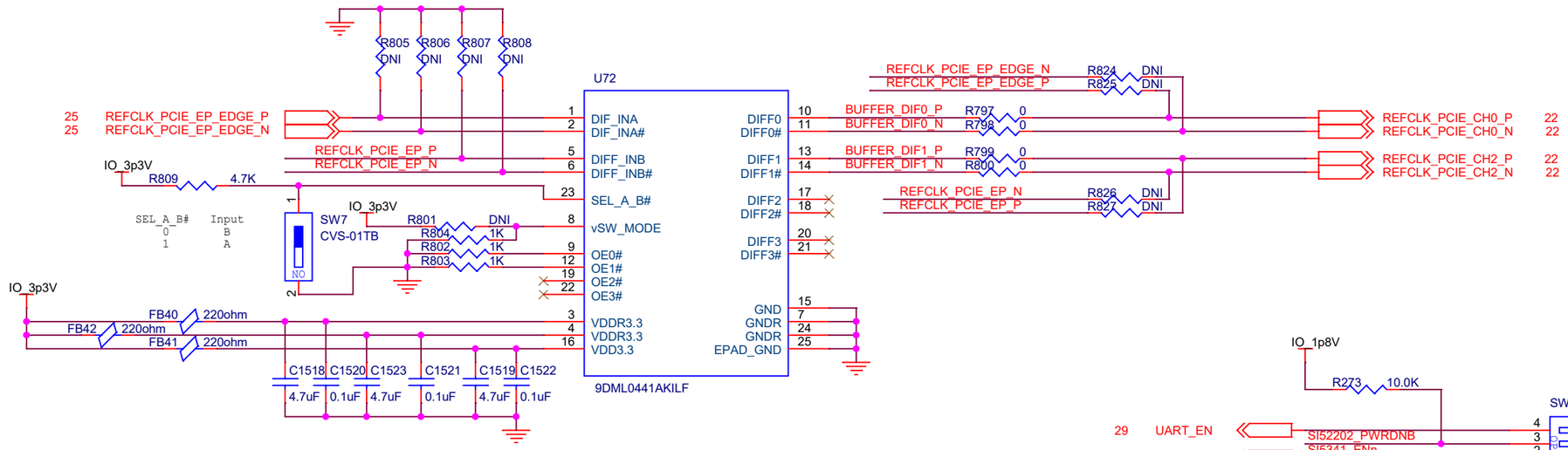

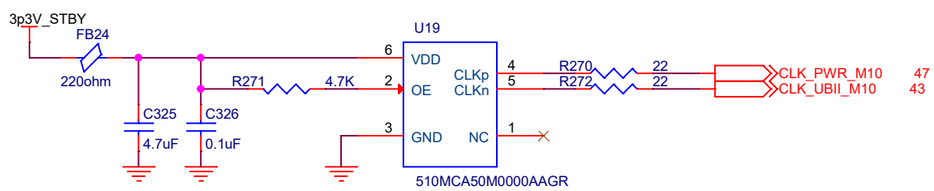

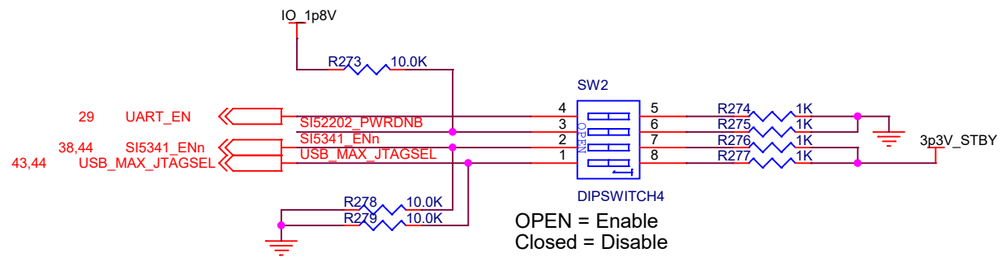

Intel Corporation,101 innovation Dr, San Jose, CA 95134

Title: AgileX F-Series FPGA Dev Kit_Enpirion

Copyright (c) 2014, Intel Corporation. All Rights Reserved.

Size: B | Document Number: K57065-001-A | Rev: A0

Date: Friday, January 10, 2020 | Sheet 39 of 66

I2C And PMBUS

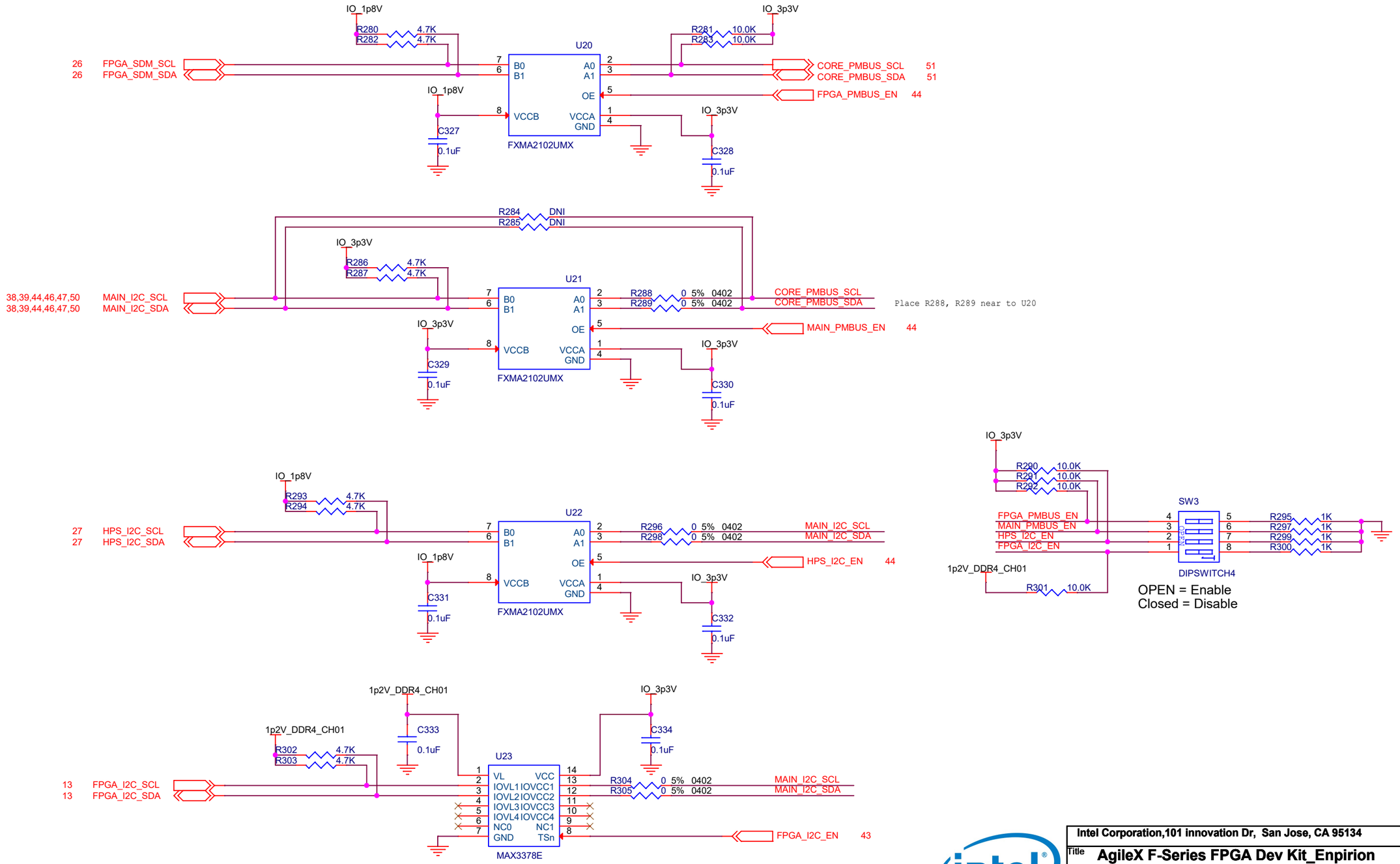

Intel Corporation,101 innovation Dr, San Jose, CA 95134

Title: AgileX F-Series FPGA Dev Kit_Enpirion

Copyright (c) 2014, Intel Corporation. All Rights Reserved.

Size	Document Number	Rev
B	K57065-001-A	A0

Date: Friday, January 10, 2020 Sheet 40 of 66

LEDs And PushButtons

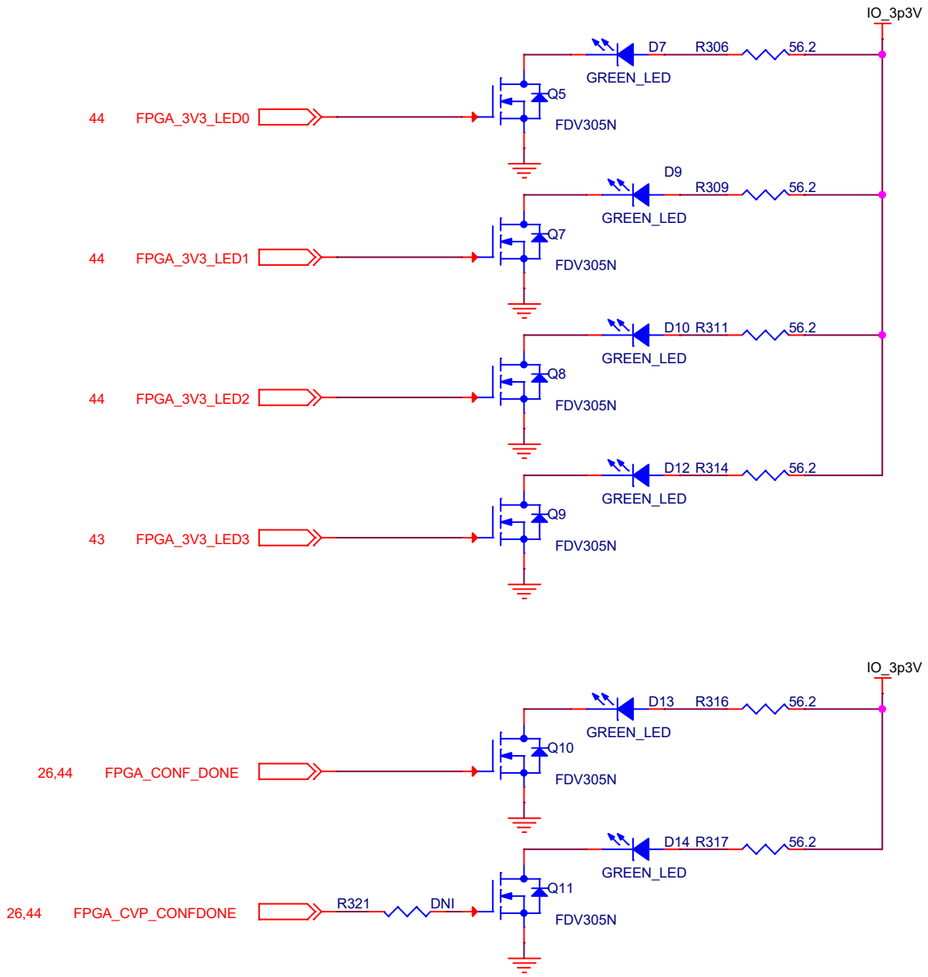

POWER LED

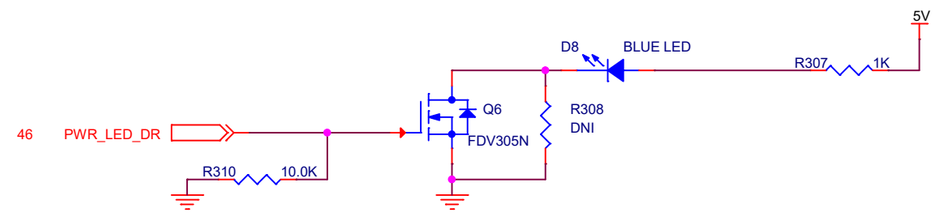

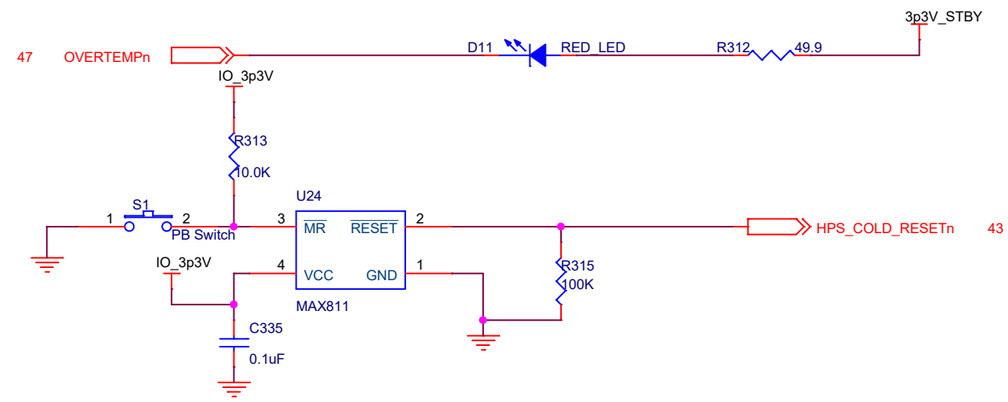

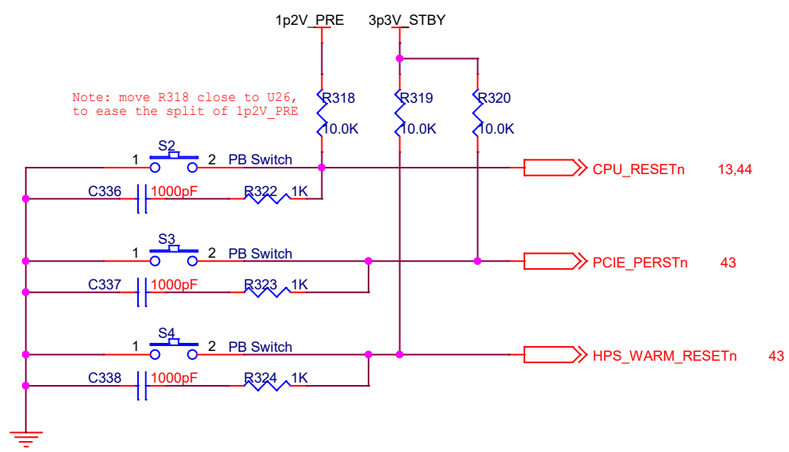

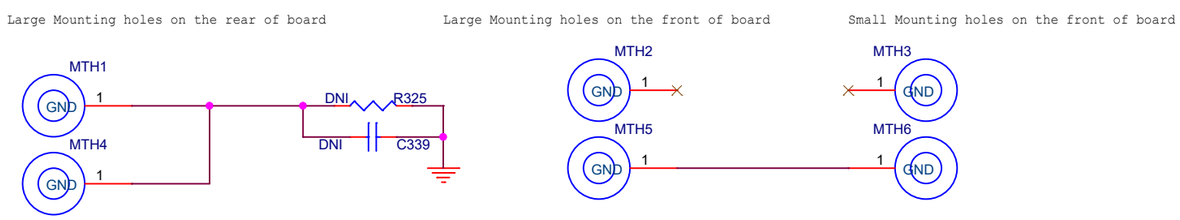

Intel Corporation,101 innovation Dr, San Jose, CA 95134

Title: AgileX F-Series FPGA Dev Kit_Enpirion

Copyright (c) 2014, Intel Corporation. All Rights Reserved.

Size	Document Number	Rev
B	K57065-001-A	A0

Date: Friday, January 10, 2020 Sheet 41 of 66

QSFPDD LED

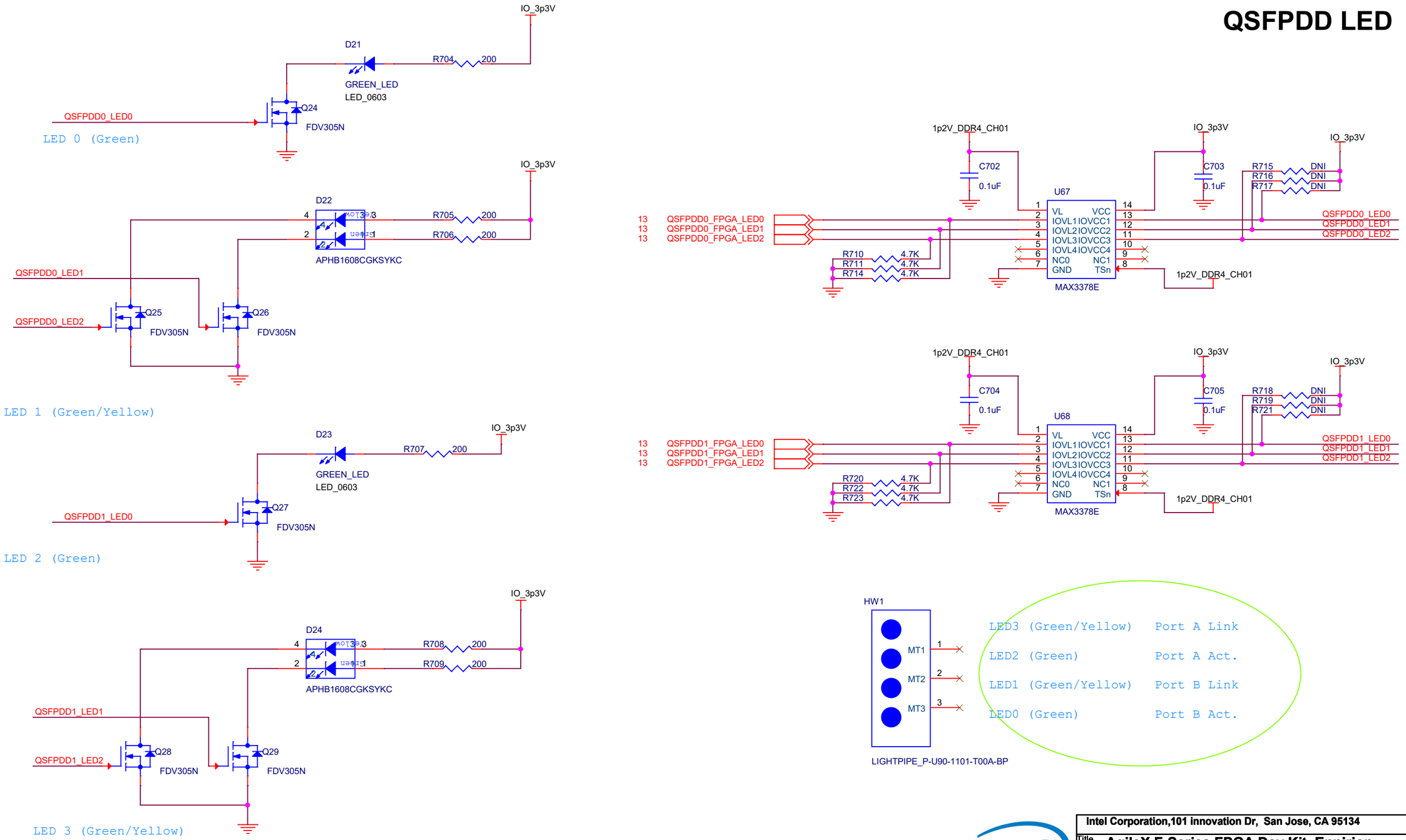

Intel Corporation,101 innovation Dr, San Jose, CA 95134

Title: AgileX F-Series FPGA Dev Kit_Enpirion

Copyright (c) 2014, Intel Corporation. All Rights Reserved.

Size	Document Number	Rev
B	K57065-001-A	A0

Date: Friday, January 10, 2020 Sheet 42 of 66

UBII-MAX10 1

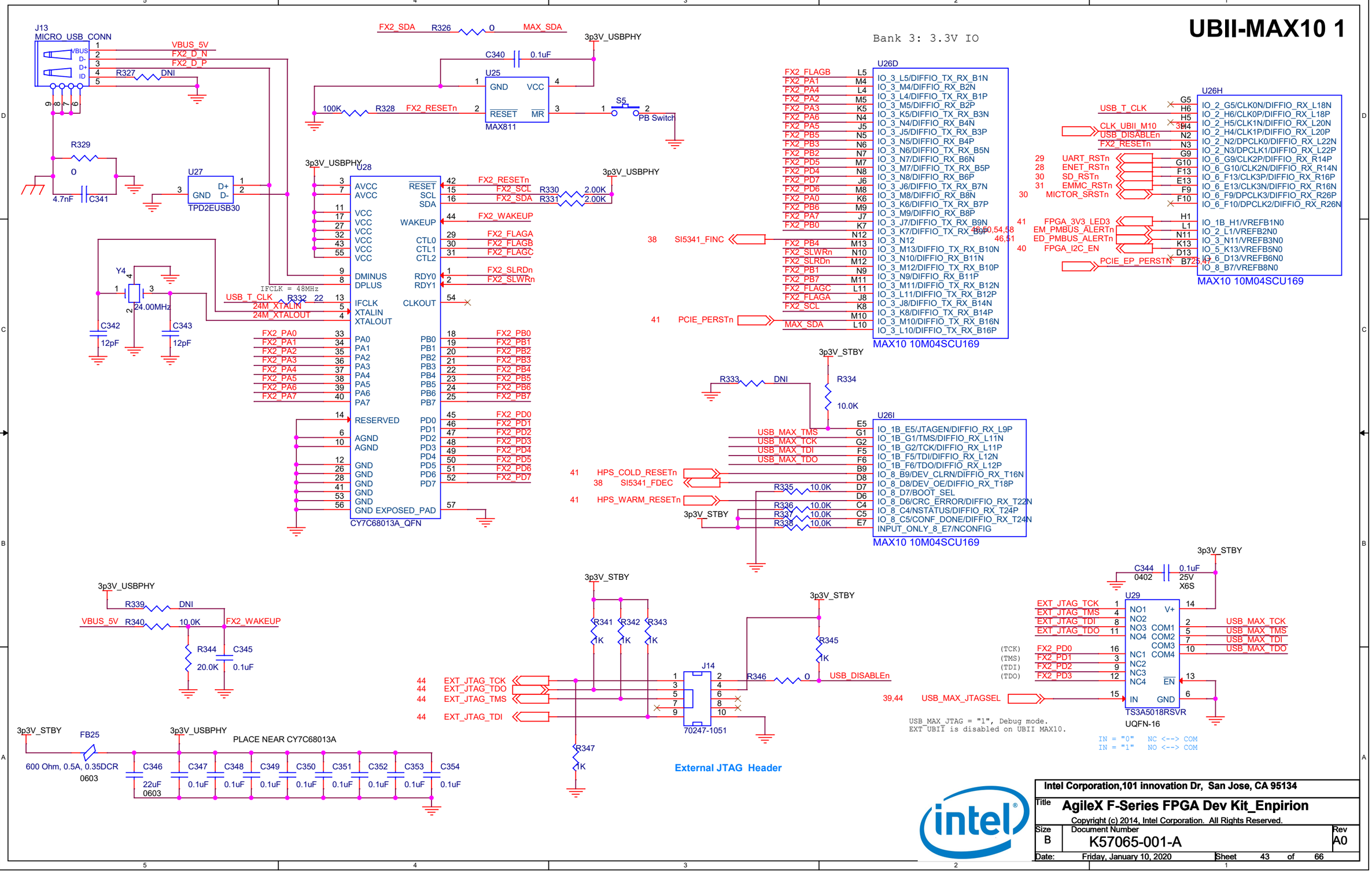

Intel Corporation,101 innovation Dr, San Jose, CA 95134

Title: AgileX F-Series FPGA Dev Kit_Enpirion

Copyright (c) 2014, Intel Corporation. All Rights Reserved.

Size	Document Number	Rev
B	K57065-001-A	A0

Date: Friday, January 10, 2020 Sheet 43 of 66

UBII-MAX10 2

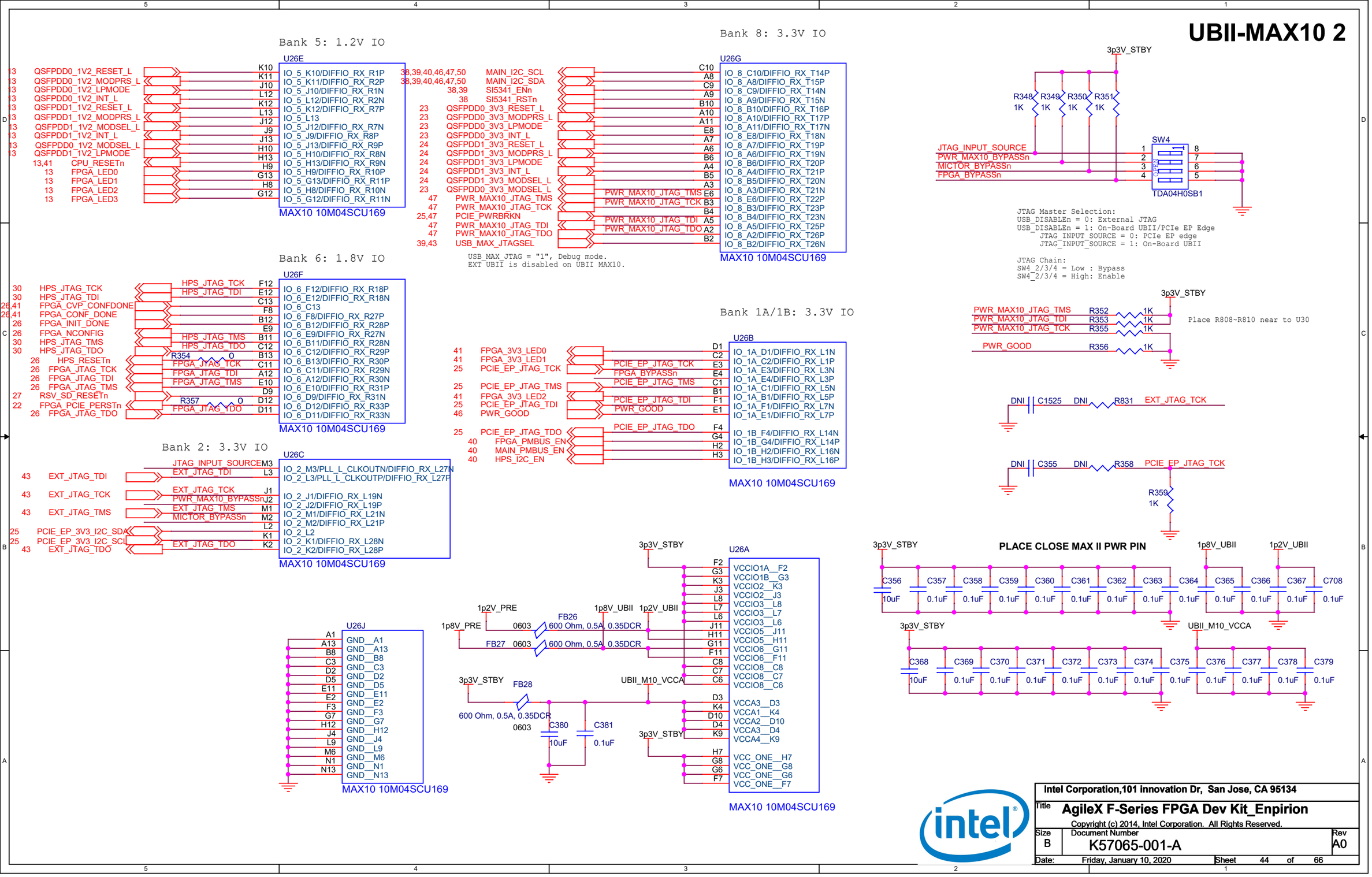

Intel Corporation,101 innovation Dr, San Jose, CA 95134

Title: AgileX F-Series FPGA Dev Kit_Enpirion

Copyright (c) 2014, Intel Corporation. All Rights Reserved.

Size: B | Document Number: K57065-001-A | Rev: A0

Date: Friday, January 10, 2020 | Sheet 44 of 66

BLANK

Intel Corporation,101 innovation Dr, San Jose, CA 95134

Title: AgileX F-Series FPGA Dev Kit_Enpirion

Copyright (c) 2014, Intel Corporation. All Rights Reserved.

Size	Document Number	Rev
B	K57065-001-A	A0

Date: Friday, January 10, 2020 Sheet 45 of 66

MAX 10 PWR Manager 1

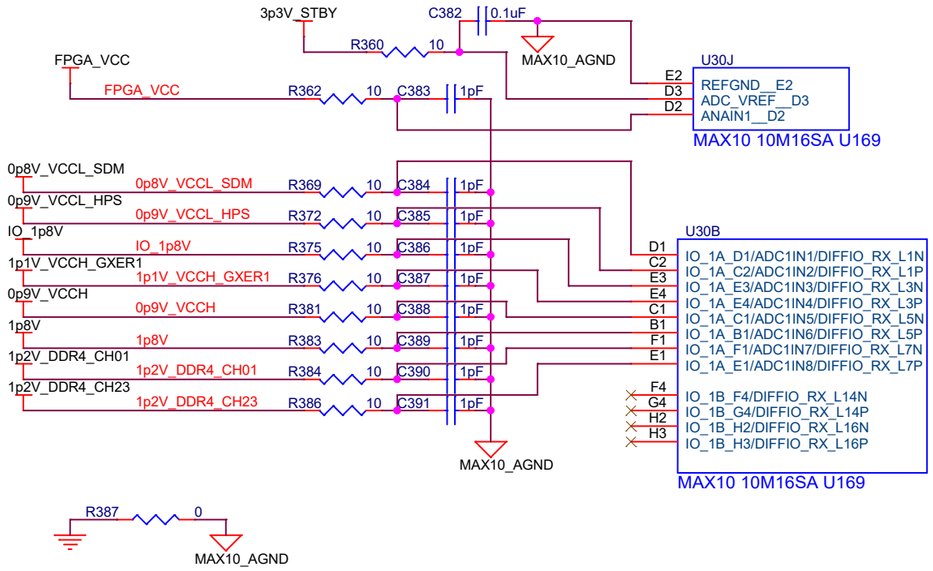

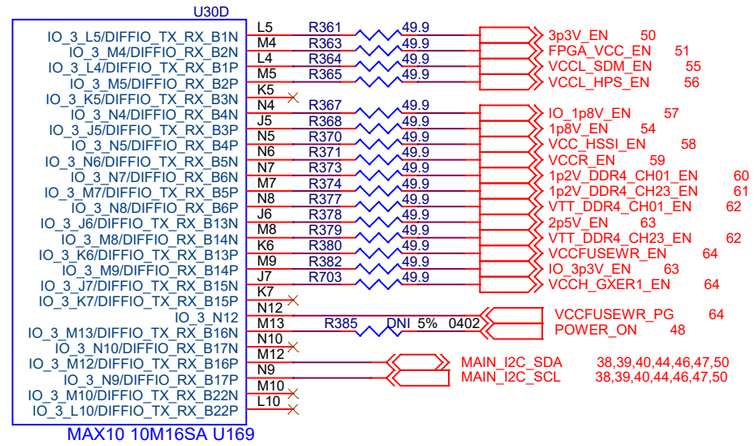

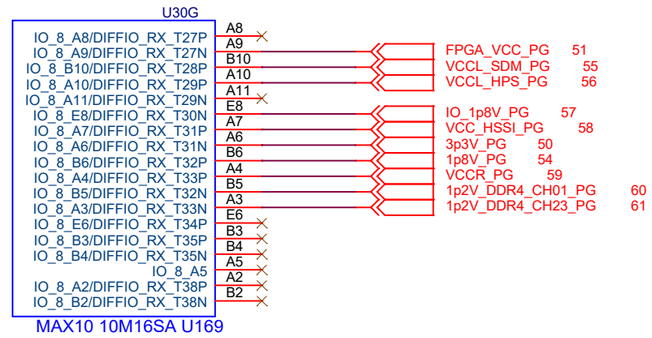

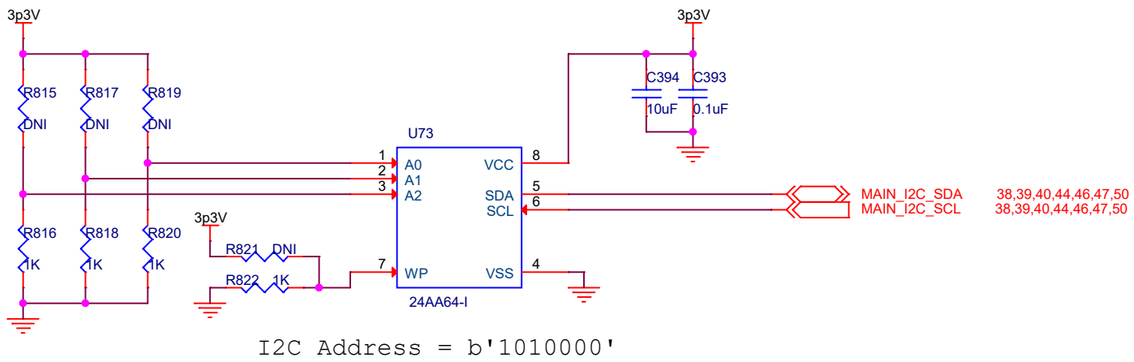

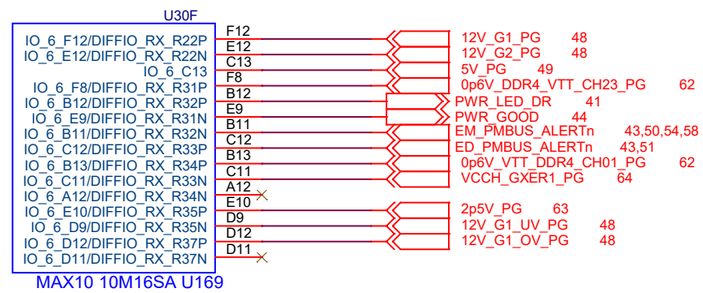

Intel Corporation,101 innovation Dr, San Jose, CA 95134

Title: AgileX F-Series FPGA Dev Kit_Enpirion

Copyright (c) 2014, Intel Corporation. All Rights Reserved.

Size	Document Number	Rev
B	K57065-001-A	A0

Date: Friday, January 10, 2020 Sheet 46 of 66

MAX10 PWR Manager 2

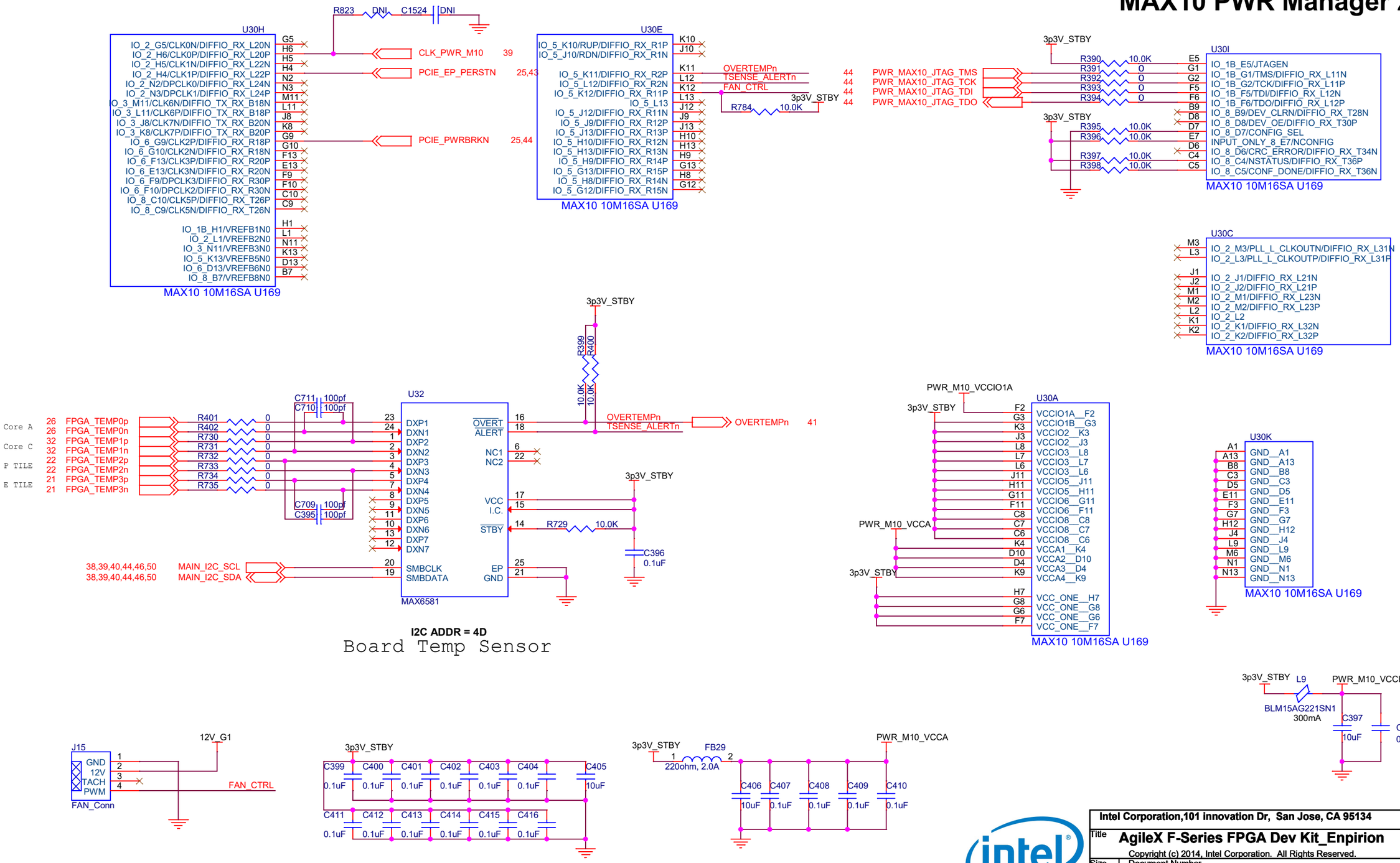

Intel Corporation,101 innovation Dr, San Jose, CA 95134

Title: AgileX F-Series FPGA Dev Kit_Enpirion

Copyright (c) 2014, Intel Corporation. All Rights Reserved.

Size	Document Number	Rev
B	K57065-001-A	A0

Date: Friday, January 10, 2020 Sheet 47 of 66

Power - Select Power Input

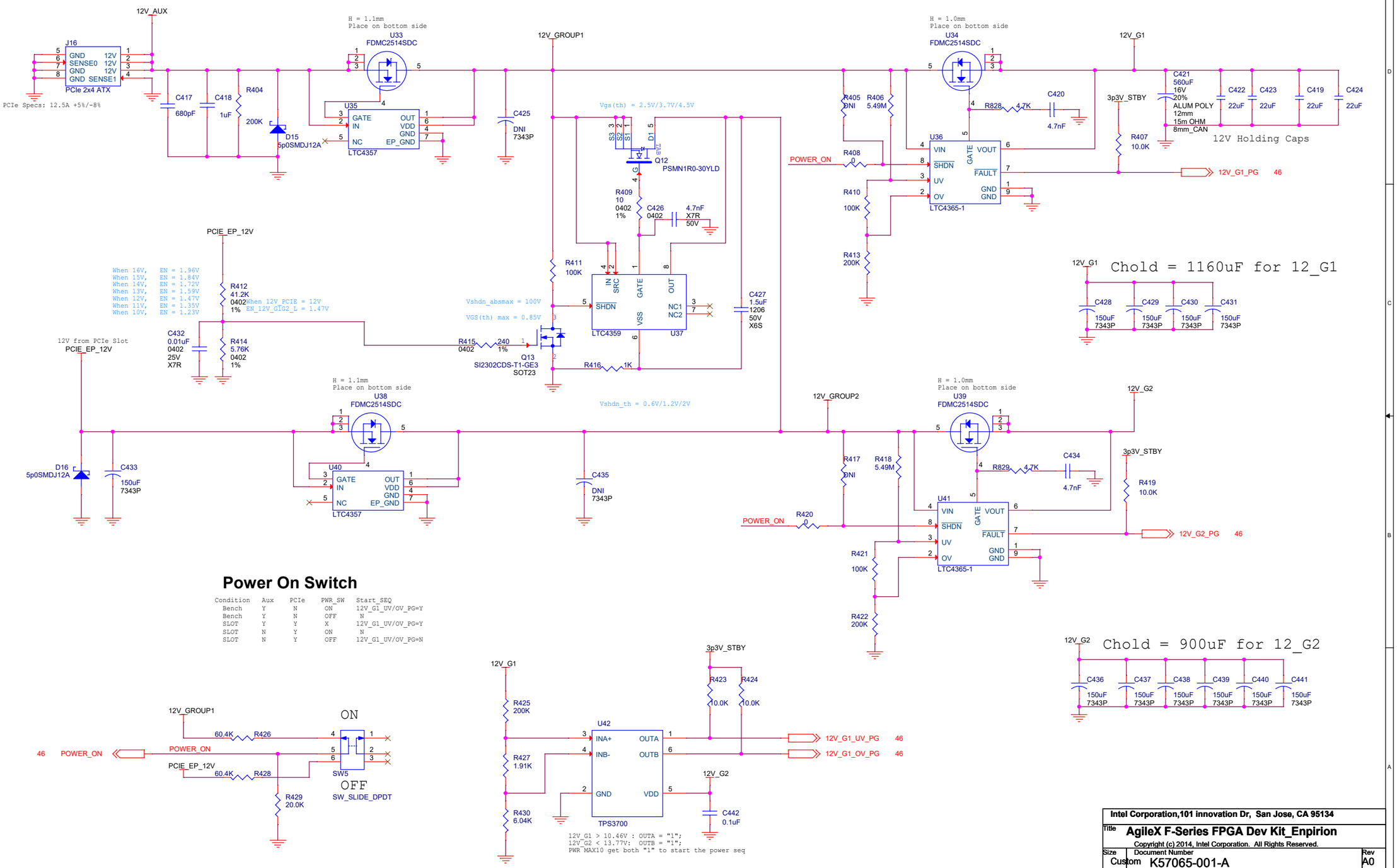

Power On Switch

Condition	Aux	PCIe	PWR_SW	Start_SEQ
Bench	Y	N	ON	12V_G1_UV/OV_PG=Y
Bench	Y	N	OFF	N
SLOT	Y	Y	X	12V_G1_UV/OV_PG=Y
SLOT	N	Y	ON	N
SLOT	N	Y	OFF	12V_G1_UV/OV_PG=N

Intel Corporation,101 innovation Dr, San Jose, CA 95134

Title: AgileX F-Series FPGA Dev Kit_Enpirion

Copyright (c) 2014, Intel Corporation. All Rights Reserved.

Size: Custom | Document Number: K57065-001-A | Rev: A0

Date: Friday, January 10, 2020 | Sheet 48 of 66

12V to 5V, 3p3V STBY, 1p8V_PRE

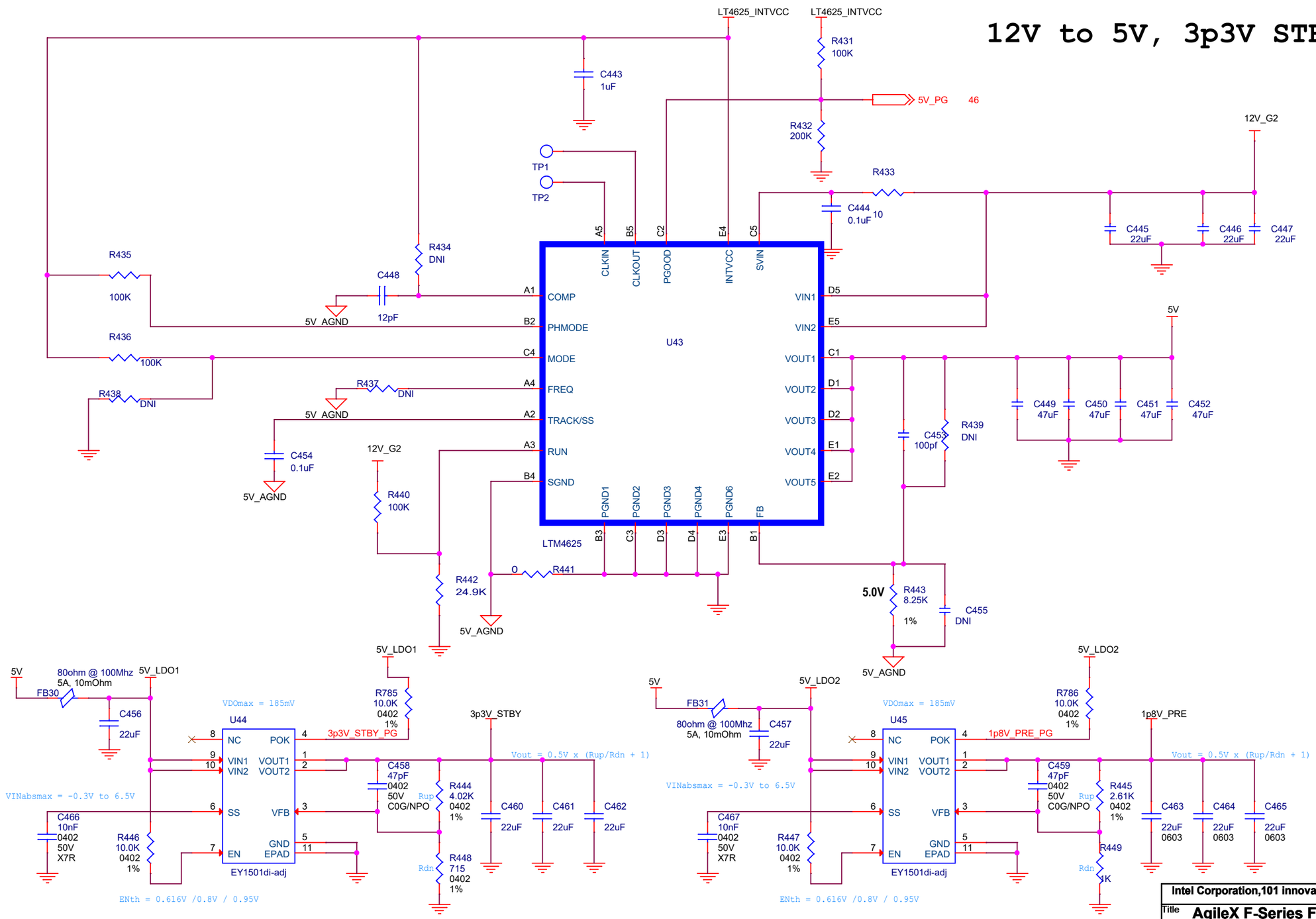

Intel Corporation,101 innovation Dr, San Jose, CA 95134

Title: AgileX F-Series FPGA Dev Kit_Enpirion

Copyright (c) 2014, Intel Corporation. All Rights Reserved.

Size	Document Number	Rev
B	K57065-001-A	A0

Date: Friday, January 10, 2020 Sheet 49 of 66

MAIN 12V to 3.3V

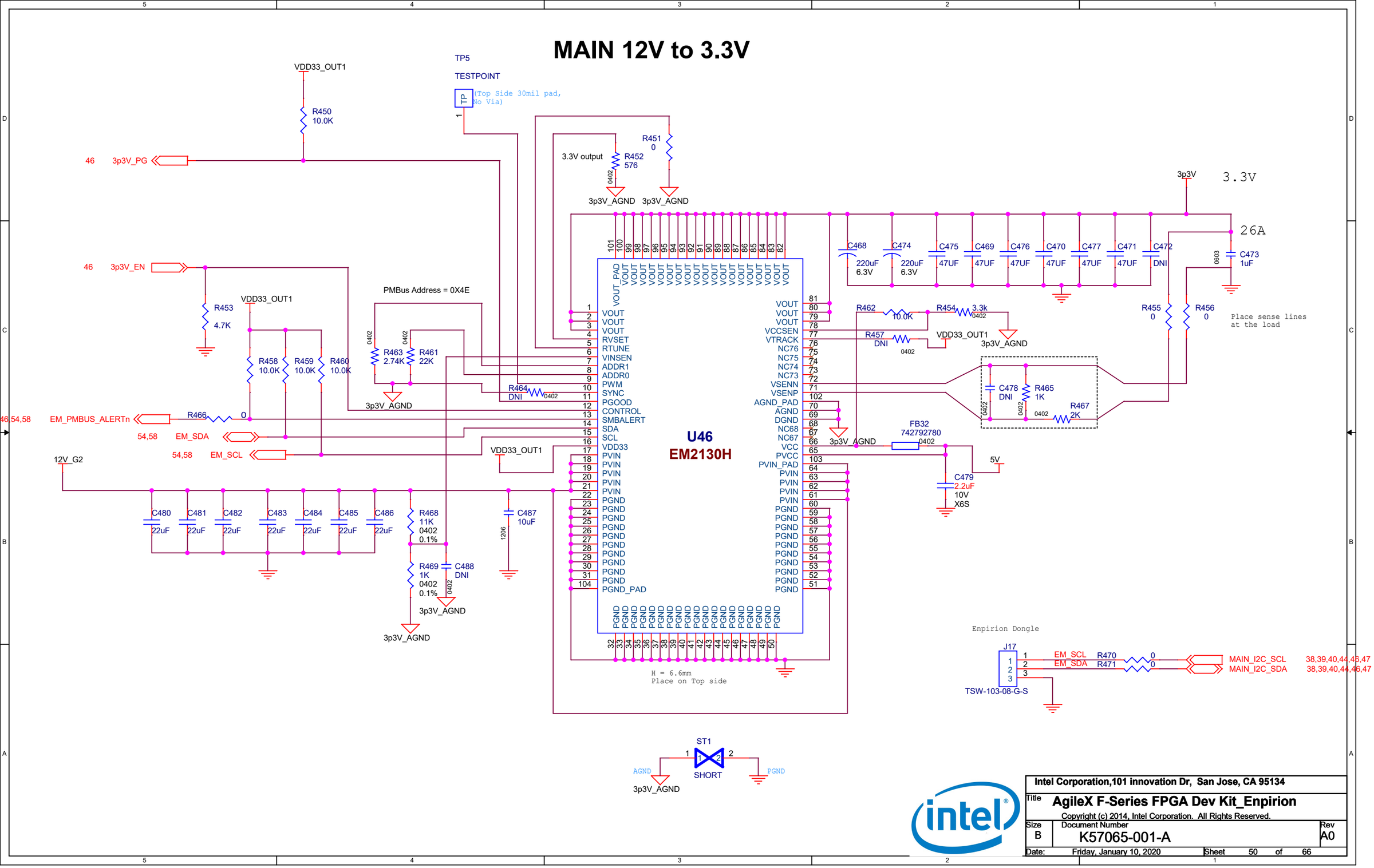

Intel Corporation,101 innovation Dr, San Jose, CA 95134	
Title	AgileX F-Series FPGA Dev Kit_Enpirion
	Copyright (c) 2014, Intel Corporation. All Rights Reserved.
Size B	Document Number K57065-001-A — Rev A0
Date: Friday, January 10, 2020	Sheet 50 of 66

VCC Core Controller

Default Core Voltage = 0.8V

I2C - ADDR 0x47

NOTE: Part Attributes of components on this page may not match up to the component's manufacturer's part number!

RVSET = 0.8V

RTUNE = 576

U47 ED8401

POPULATE R909 WITH 0 OHM and DNI R908 IF USING 3.6V SUPPLY.

POPULATE R908 with 0 OHM and DNI R909 IF USING 3.3V SUPPLY

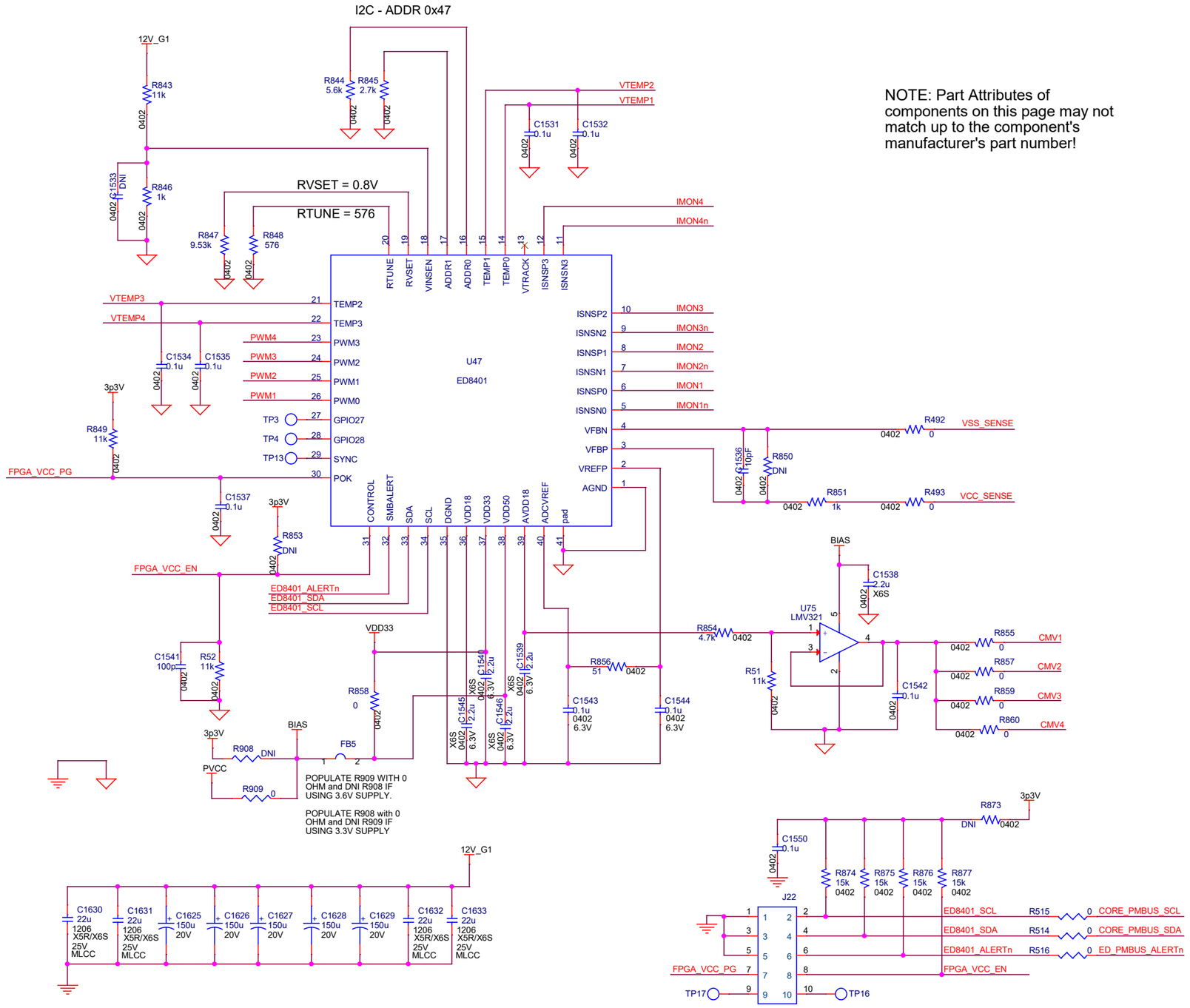

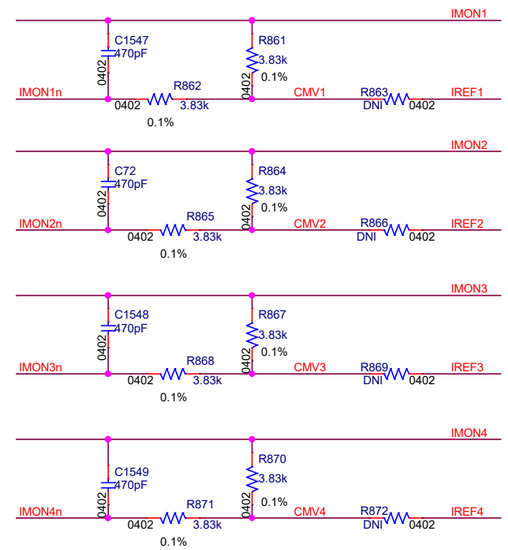

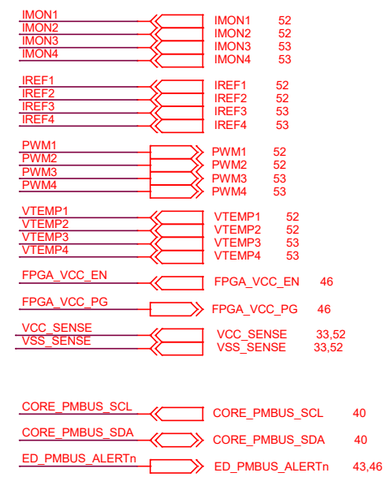

Intel Corporation,101 innovation Dr, San Jose, CA 95134

Title: AgileX F-Series FPGA Dev Kit_Enpirion

Copyright (c) 2014, Intel Corporation. All Rights Reserved.

Size: Custom | Document Number: K57065-001-A | Rev: A0

Date: Friday, January 10, 2020 | Sheet 51 of 66

VCC Core Phase 1 - 2

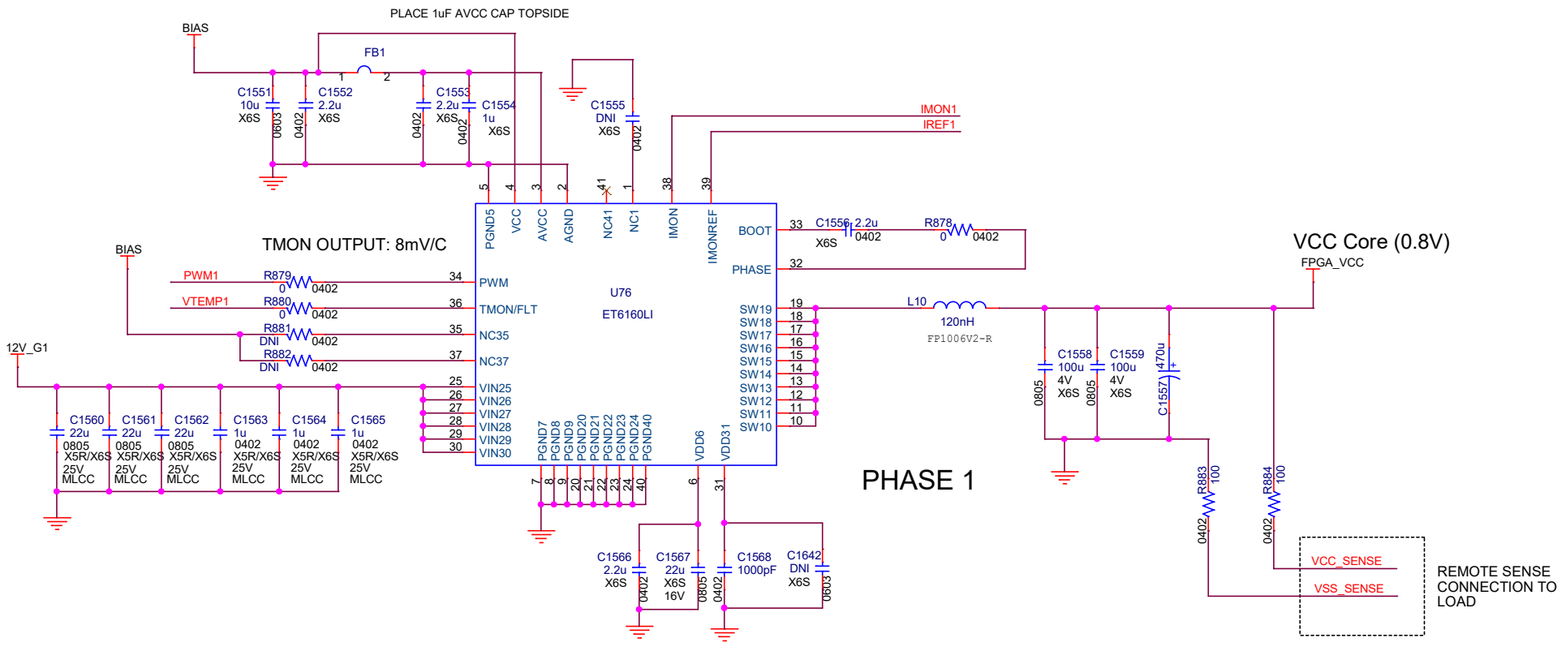

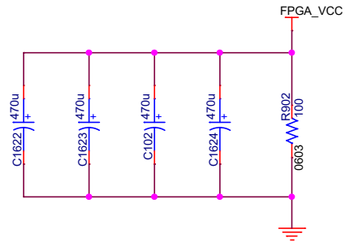

NOTE: Part Attributes of components on this page may not match up to the component's manufacturer's part number!

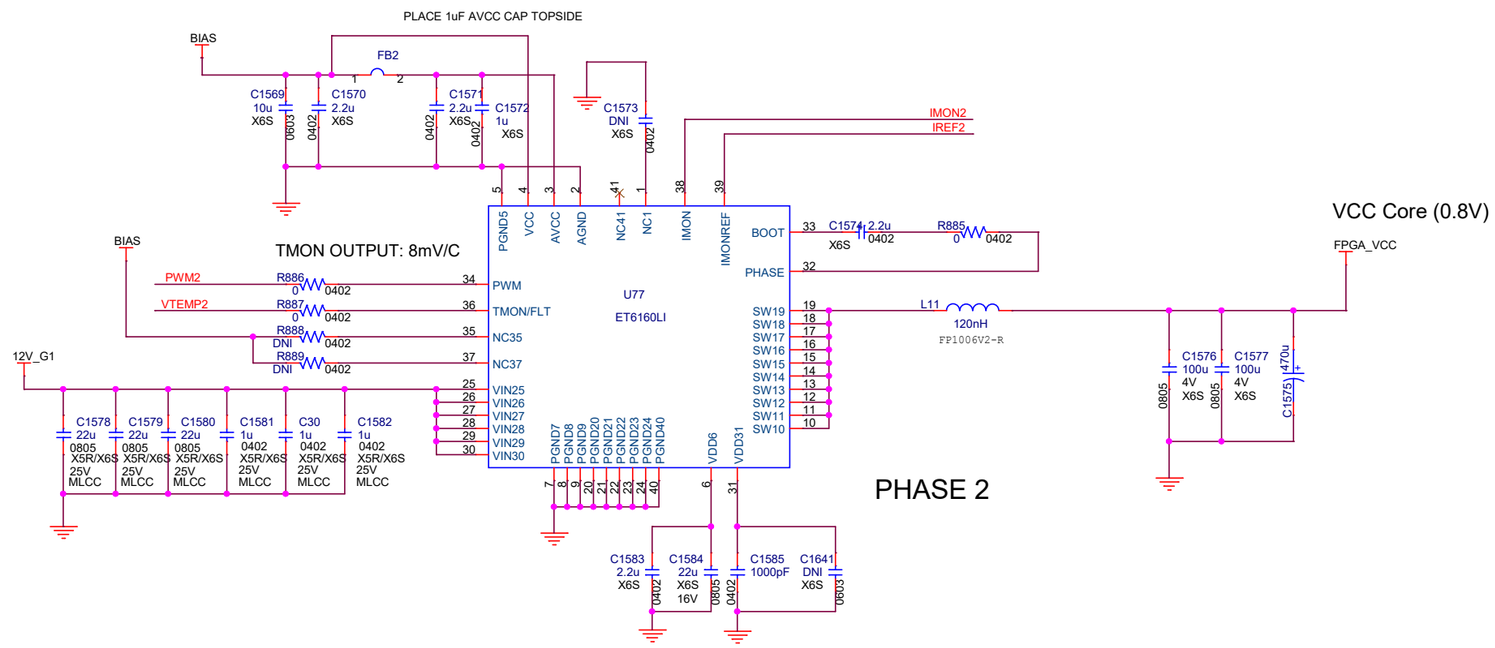

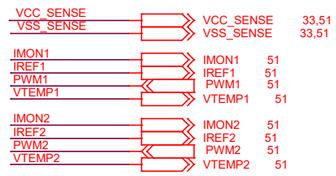

Intel Corporation,101 innovation Dr, San Jose, CA 95134

Title: **AgileX F-Series FPGA Dev Kit_Enpirion**

Copyright (c) 2014, Intel Corporation. All Rights Reserved.

Size	Document Number	Rev
Custom	K57065-001-A	A0

Date: Friday, January 10, 2020 Sheet 52 of 66

VCC Core Phase 3 - 4

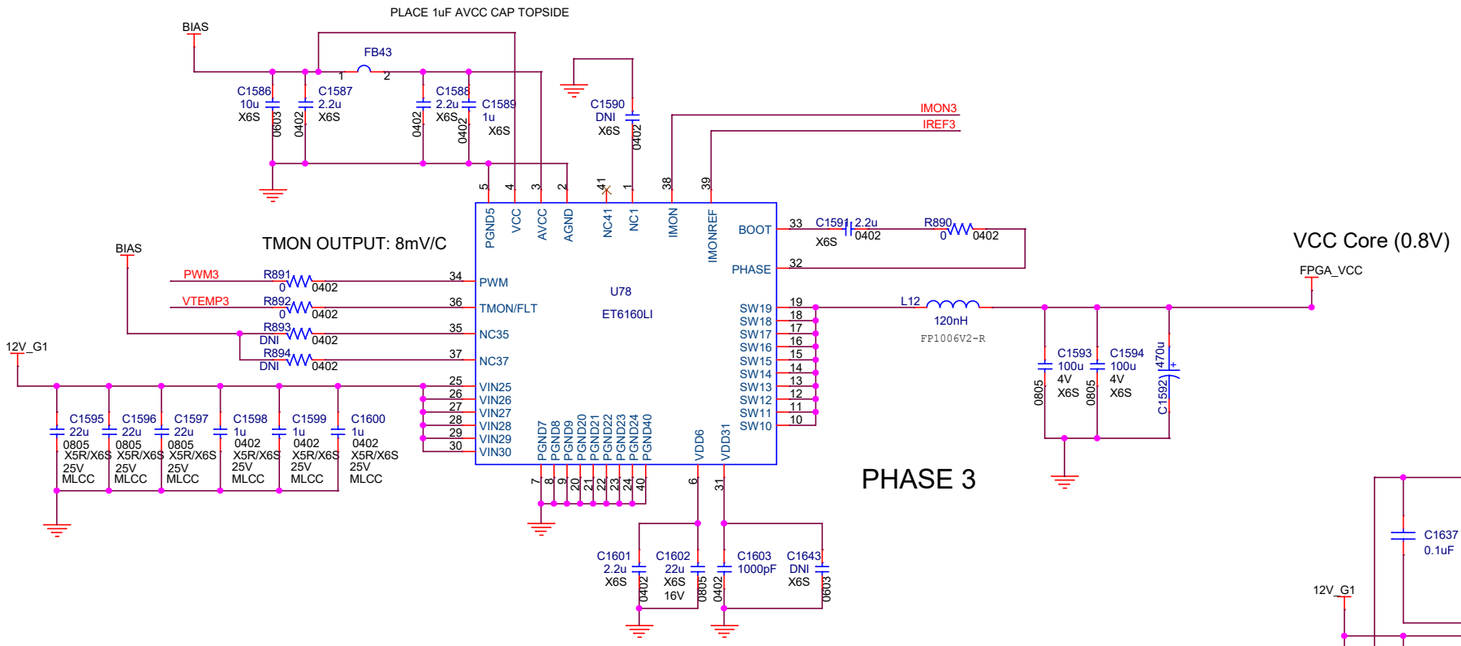

NOTE: Part Attributes of components on this page may not match up to the component's manufacturer's part number!

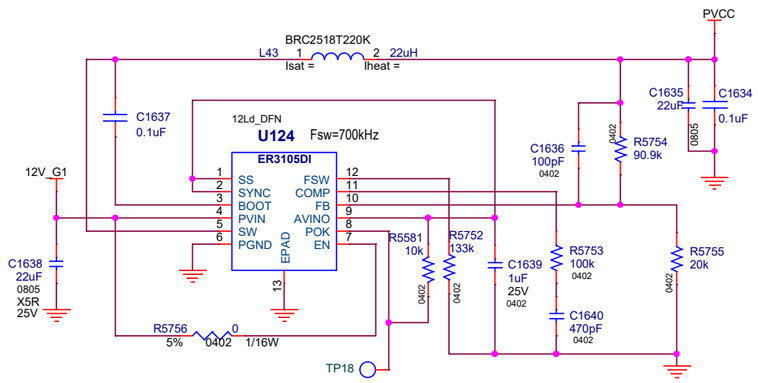

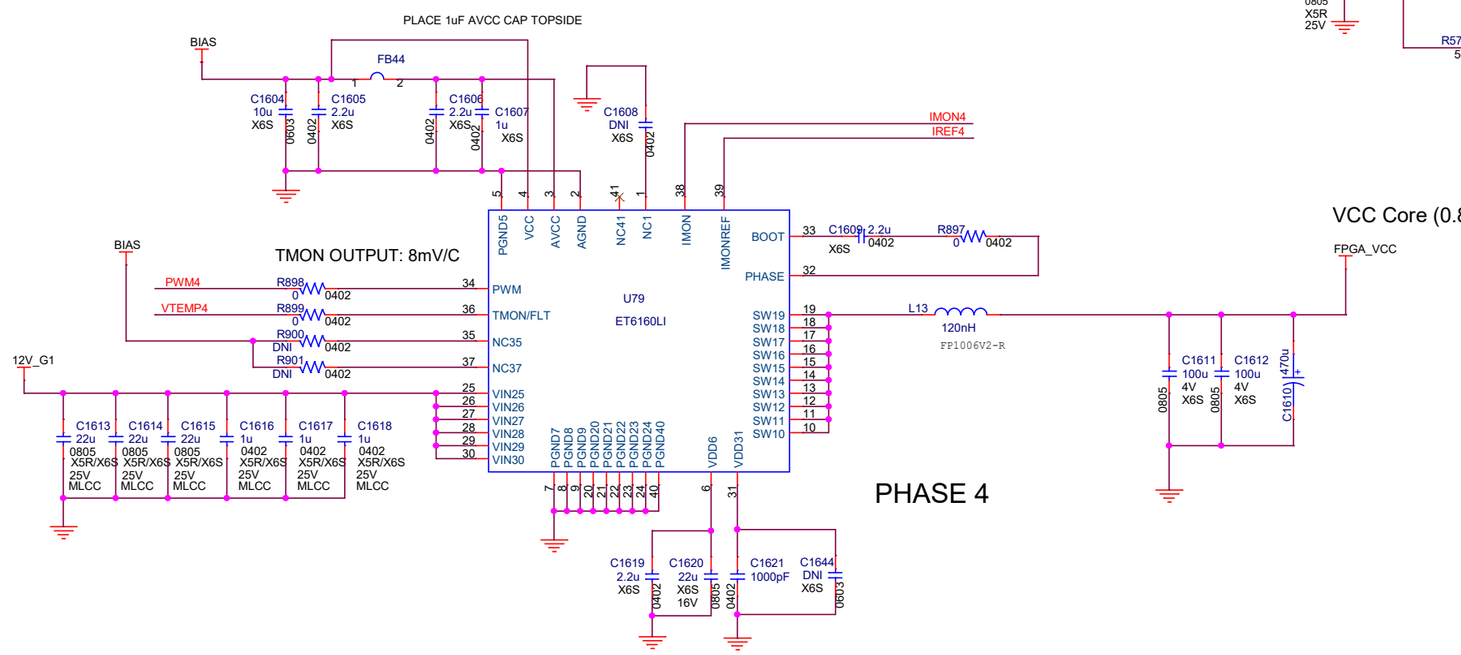

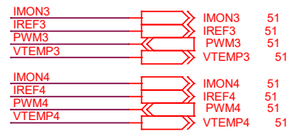

Intel Corporation,101 Innovation Dr, San Jose, CA 95134

Title: **AgileX F-Series FPGA Dev Kit_Enpirion**

Copyright (c) 2014, Intel Corporation. All Rights Reserved.

Size	Document Number	Rev
Custom	K57065-001-A	A0

Date: Friday, January 10, 2020 Sheet 53 of 66

PWR - 1p8V

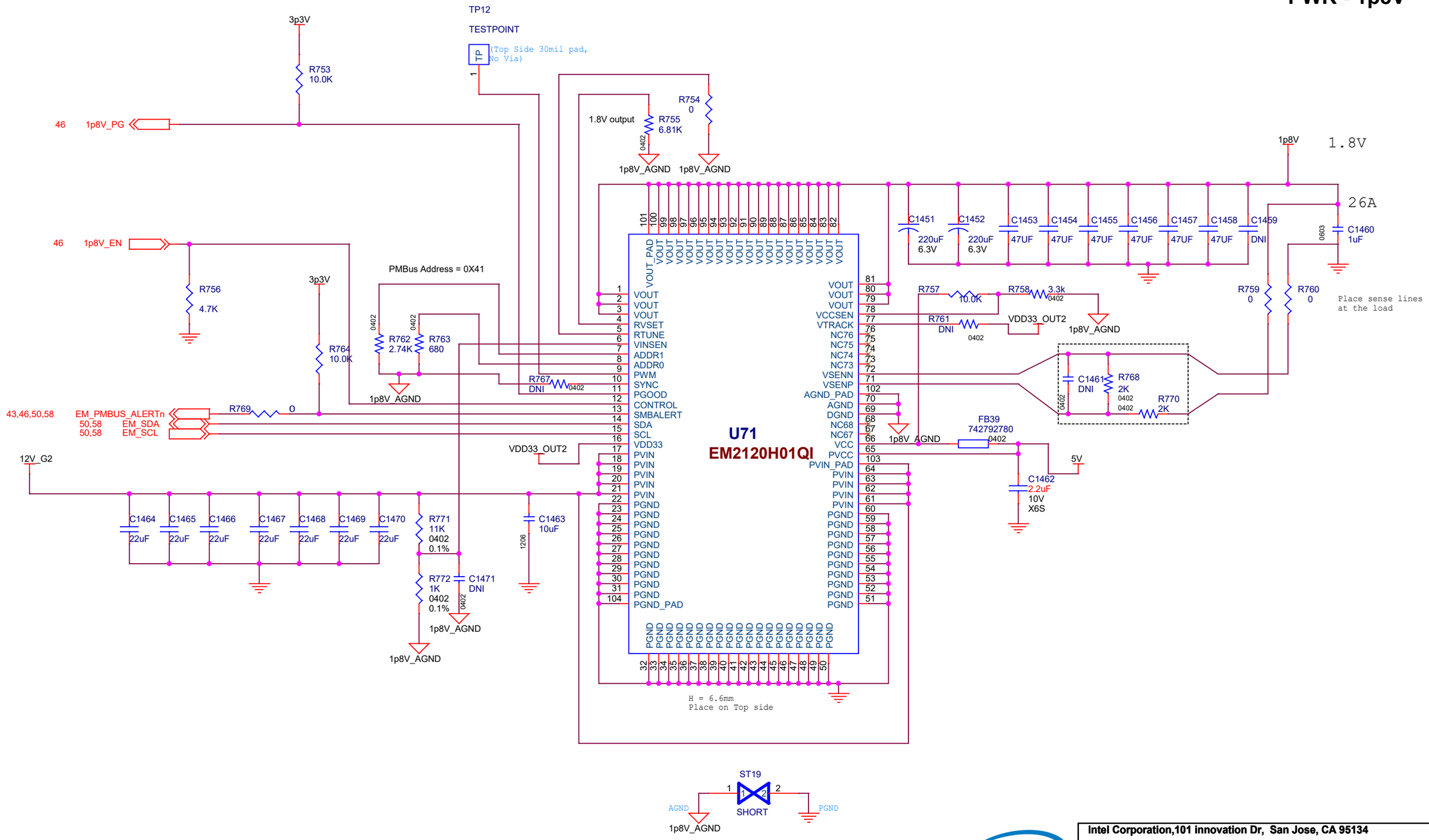

Intel Corporation,101 innovation Dr, San Jose, CA 95134	
Title	AgileX F-Series FPGA Dev Kit_Enpirion
Copyright (c) 2014, Intel Corporation. All Rights Reserved.	
Size B	Document Number K57065-001-A — Rev A0
Date: Friday, January 10, 2020	Sheet 54 of 66

PWR - 0p8V_VCCL_SDM

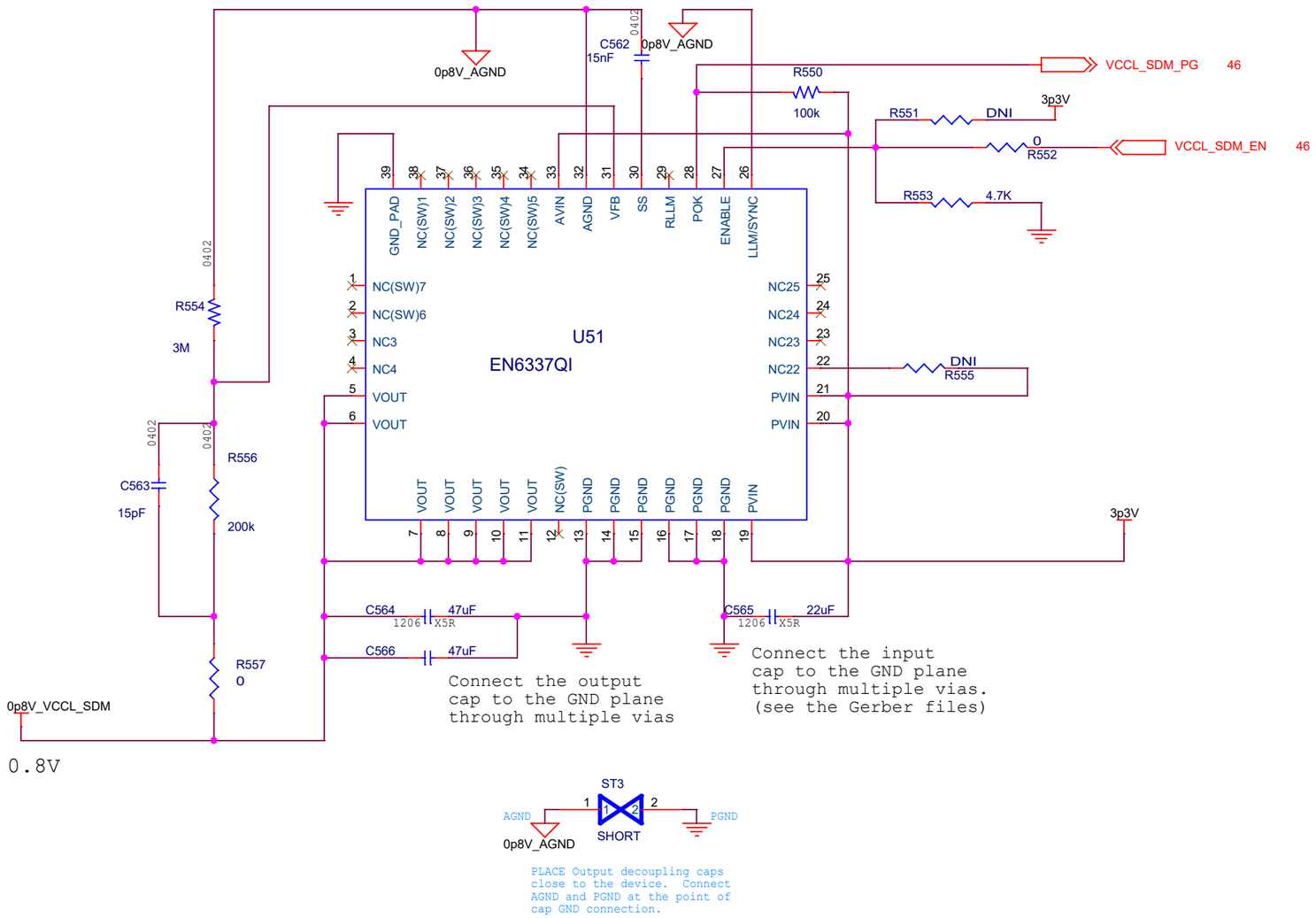

Intel Corporation,101 innovation Dr, San Jose, CA 95134

Title: AgileX F-Series FPGA Dev Kit_Enpirion

Copyright (c) 2014, Intel Corporation. All Rights Reserved.

Size	Document Number	Rev
B	K57065-001-A	A0

Date: Friday, January 10, 2020 Sheet 55 of 66

PWR - 0p9V_VCCL_HPS

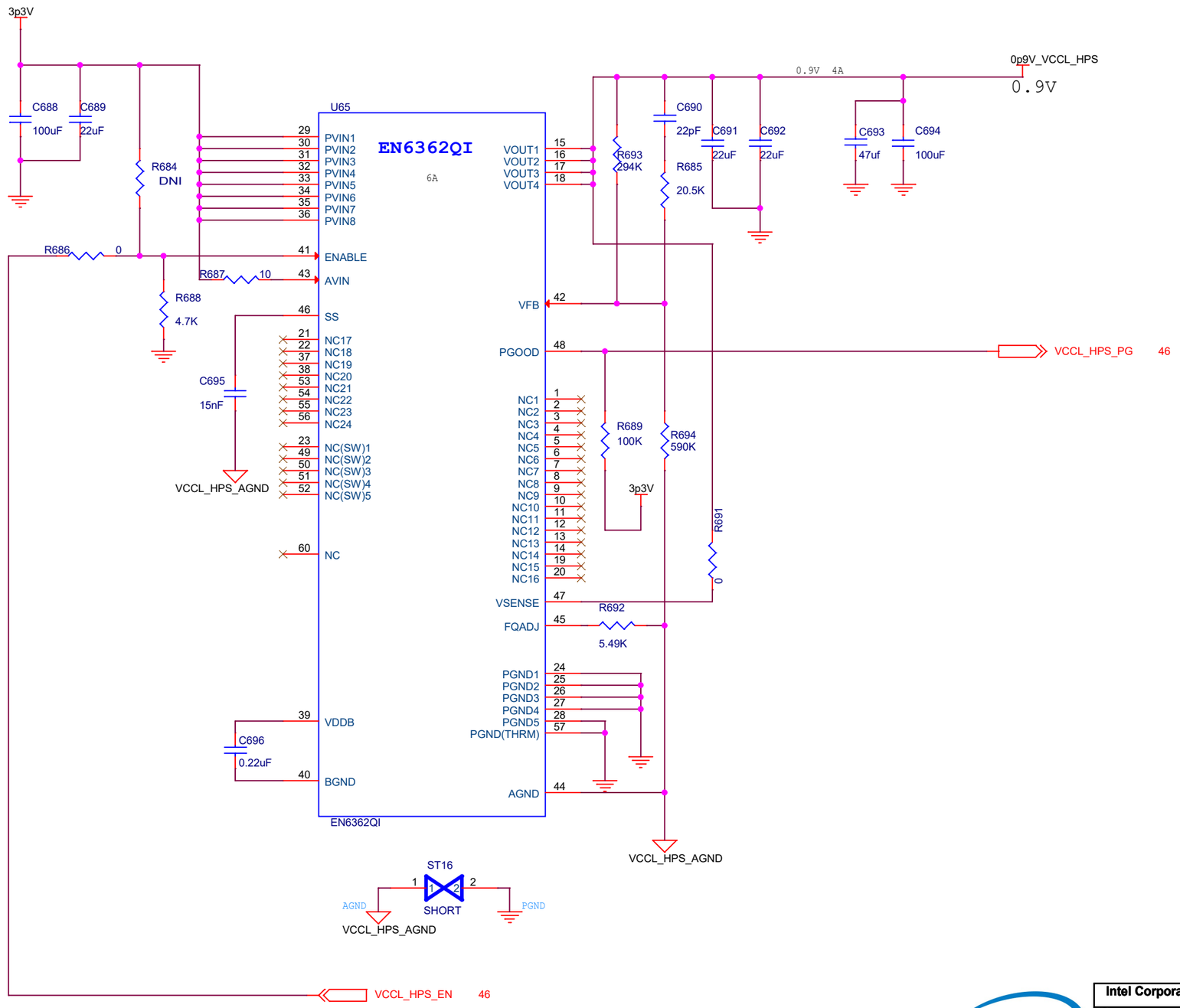

Intel Corporation,101 innovation Dr, San Jose, CA 95134	
Title	AgileX F-Series FPGA Dev Kit_Enpirion
	Copyright (c) 2014, Intel Corporation. All Rights Reserved.
Size B	Document Number K57065-001-A — Rev A0
Date: Friday, January 10, 2020	Sheet 56 of 66

PWR - IO_1p8V

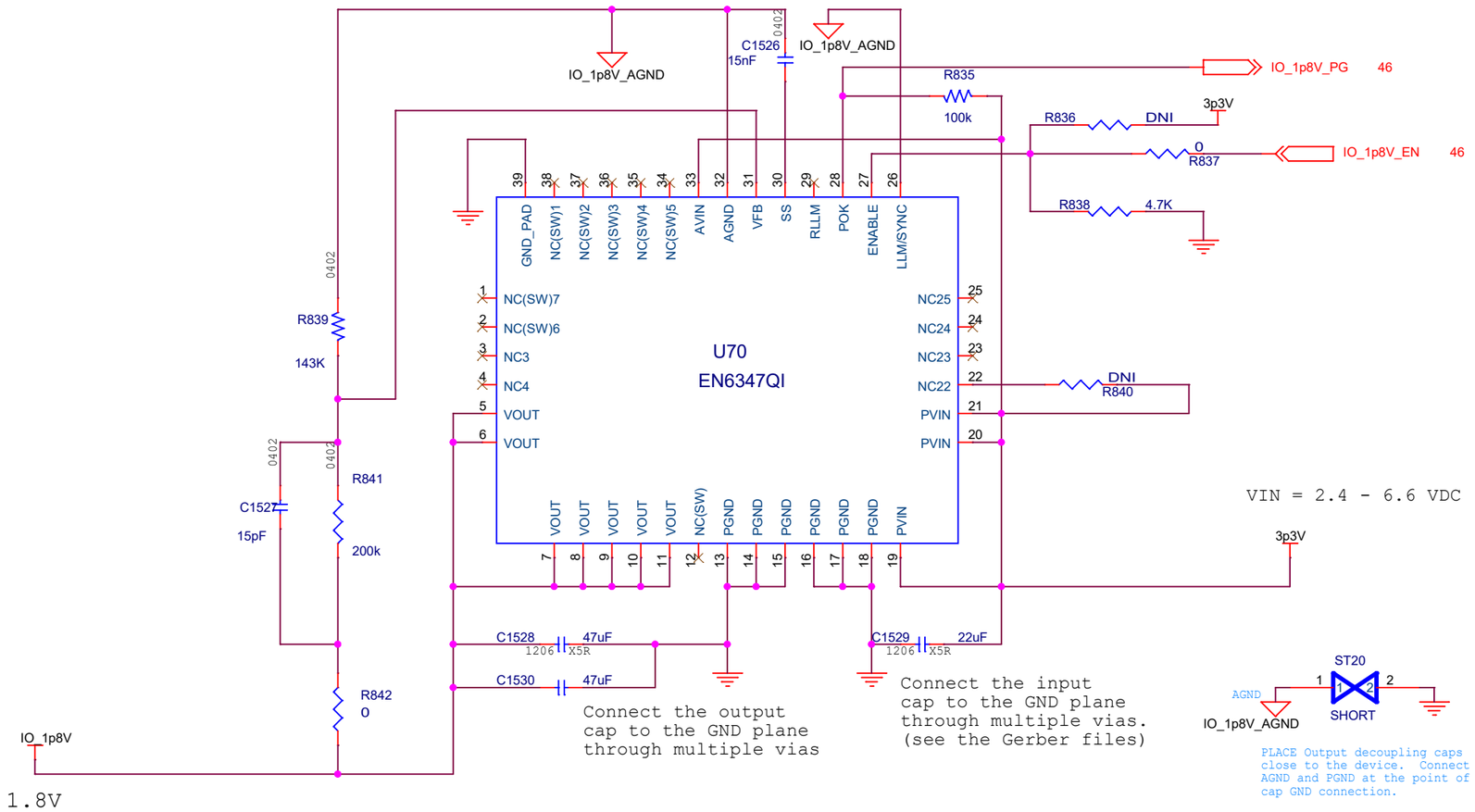

Intel Corporation,101 innovation Dr, San Jose, CA 95134

Title: AgileX F-Series FPGA Dev Kit_Enpirion

Copyright (c) 2014, Intel Corporation. All Rights Reserved.

Size	Document Number	Rev
B	K57065-001-A	A0

Date: Friday, January 10, 2020 Sheet 57 of 66

PWR - VCC_HSSI_GXER1/VCC_HSSI_GXPL1

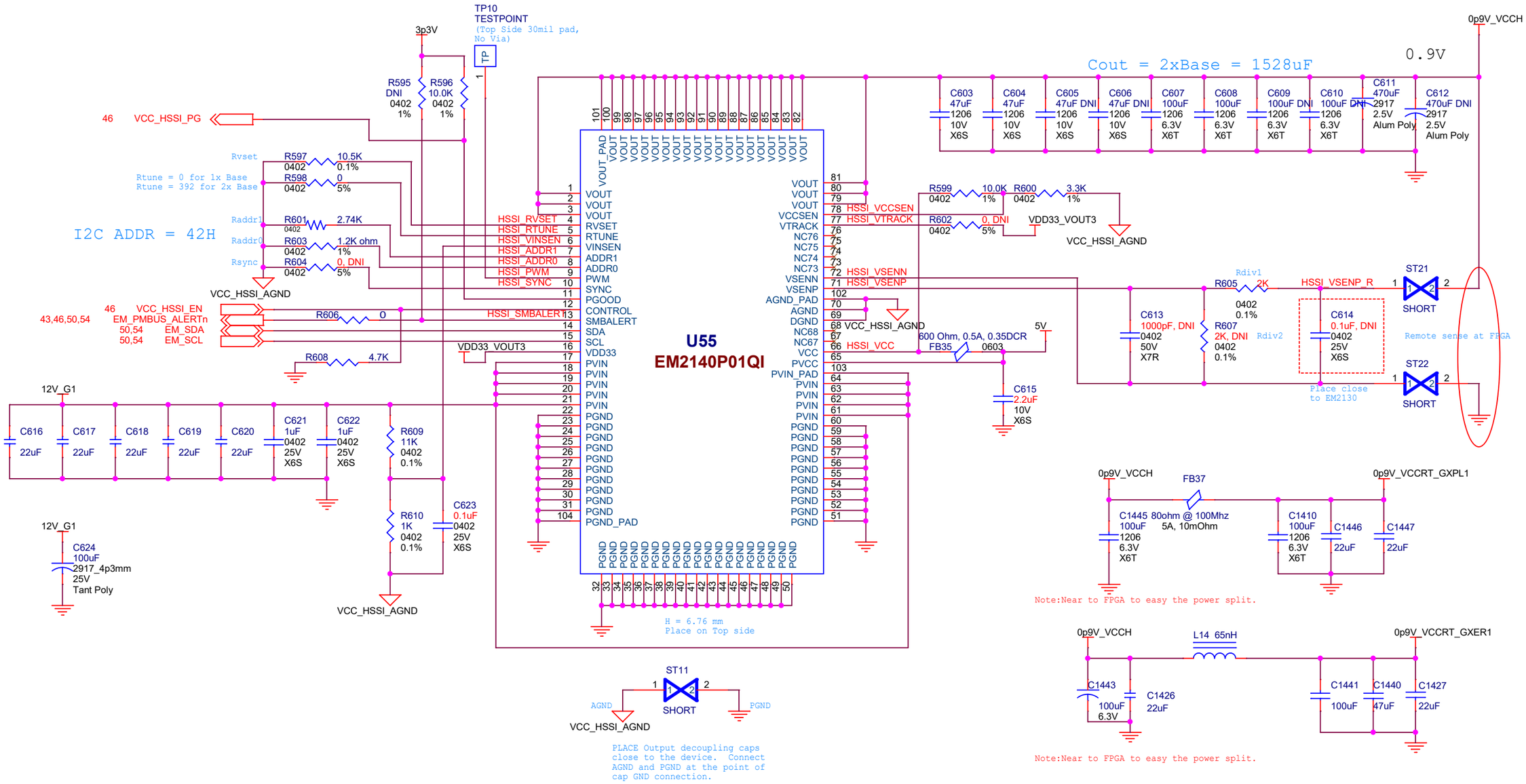

Intel Corporation,101 innovation Dr, San Jose, CA 95134

Title: AgileX F-Series FPGA Dev Kit_Enpirion

Copyright (c) 2014, Intel Corporation. All Rights Reserved.

Size	Document Number	Rev
B	K57065-001-A	A0

Date: Friday, January 10, 2020 Sheet 58 of 66

PWR - 1p2V VCCR

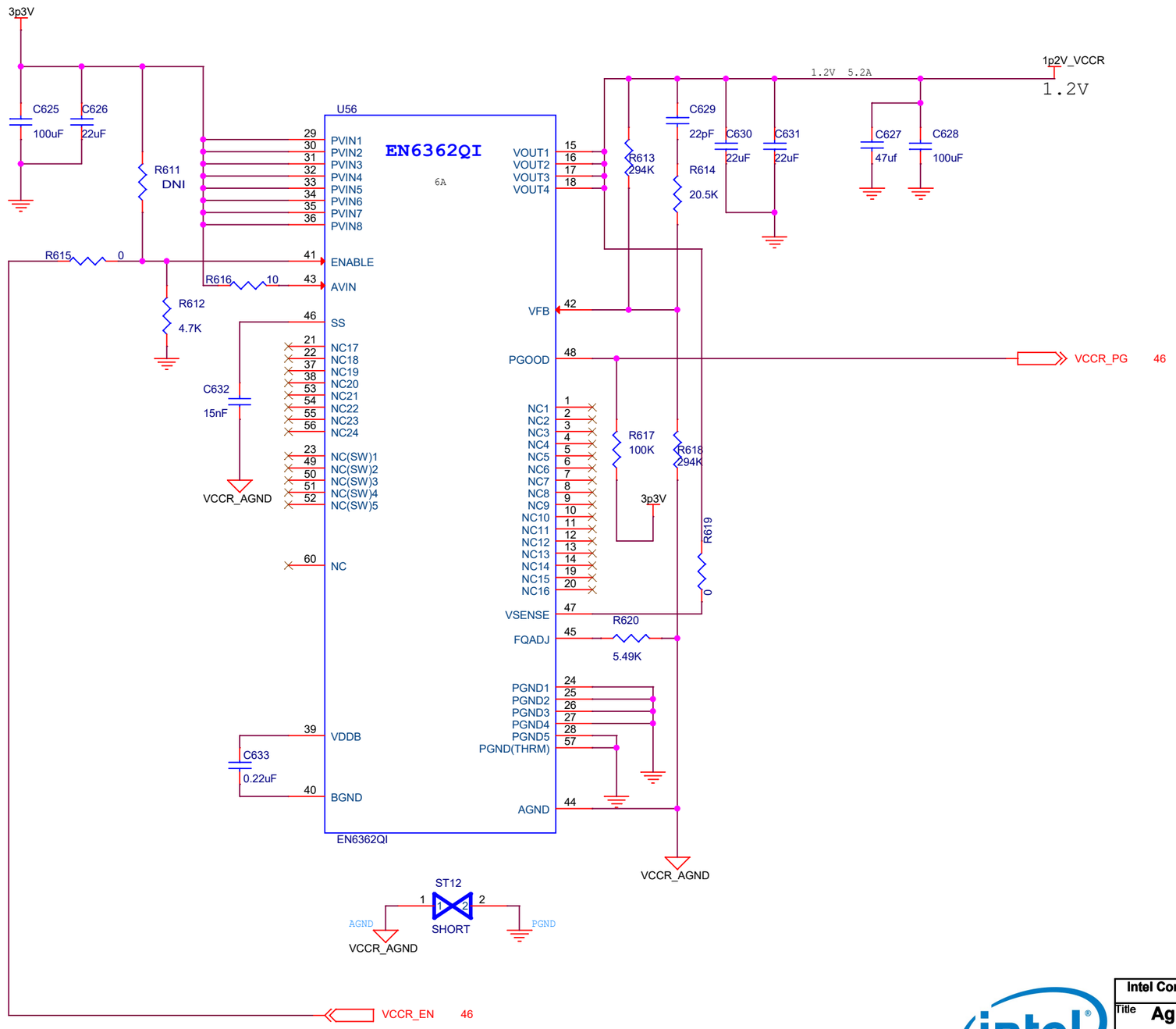

Intel Corporation,101 innovation Dr, San Jose, CA 95134

Title: AgileX F-Series FPGA Dev Kit_Enpirion

Copyright (c) 2014, Intel Corporation. All Rights Reserved.

Size	Document Number	Rev
B	K57065-001-A	A0

Date: Friday, January 10, 2020 Sheet 59 of 66

PWR - 1p2V_DDR4_CH01

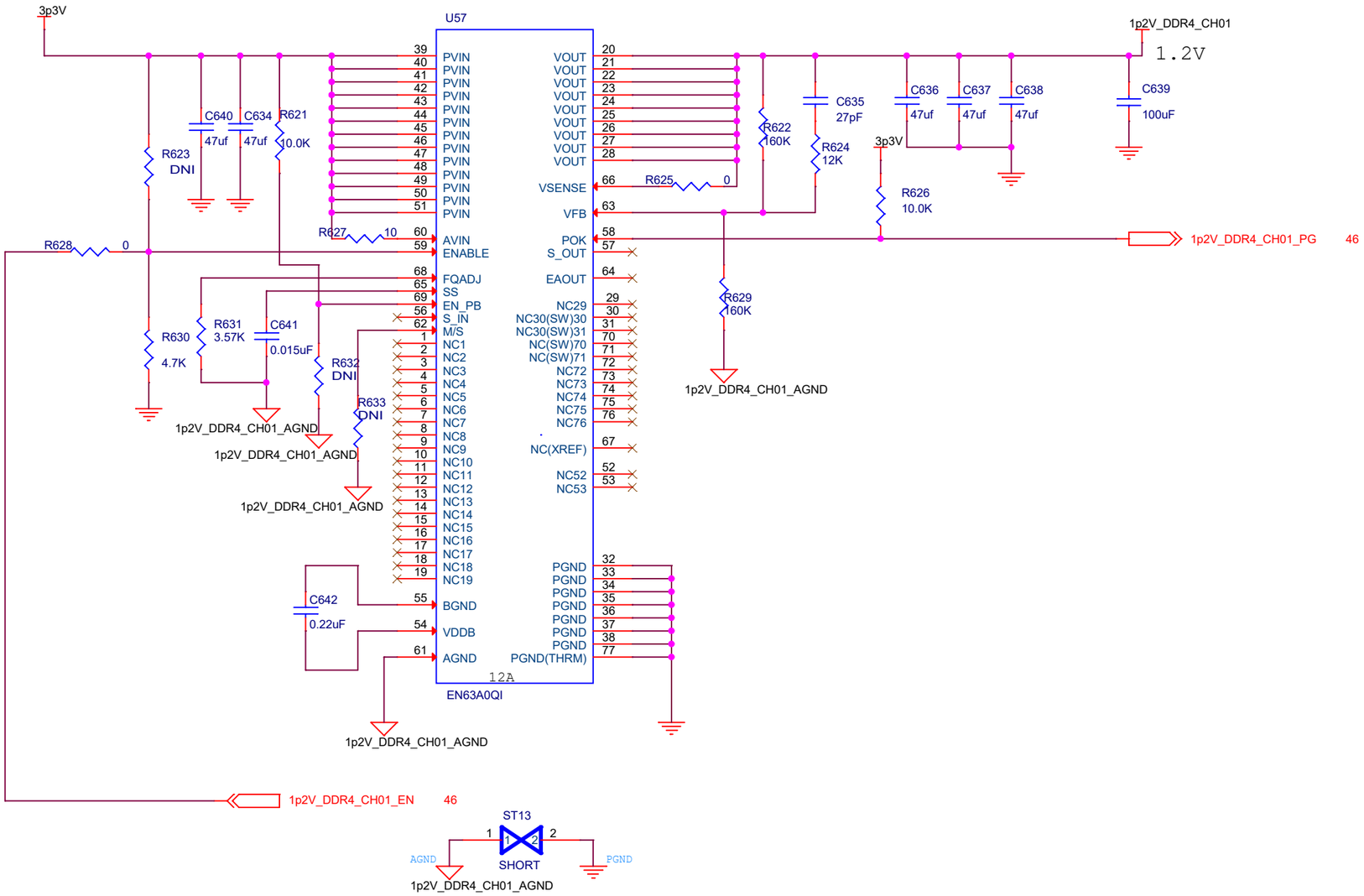

Intel Corporation,101 innovation Dr, San Jose, CA 95134

Title: AgileX F-Series FPGA Dev Kit_Enpirion

Copyright (c) 2014, Intel Corporation. All Rights Reserved.

Size	Document Number	Rev
B	K57065-001-A	A0

Date: Friday, January 10, 2020 Sheet 60 of 66

PWR - 1p2V_DDR4_CH23

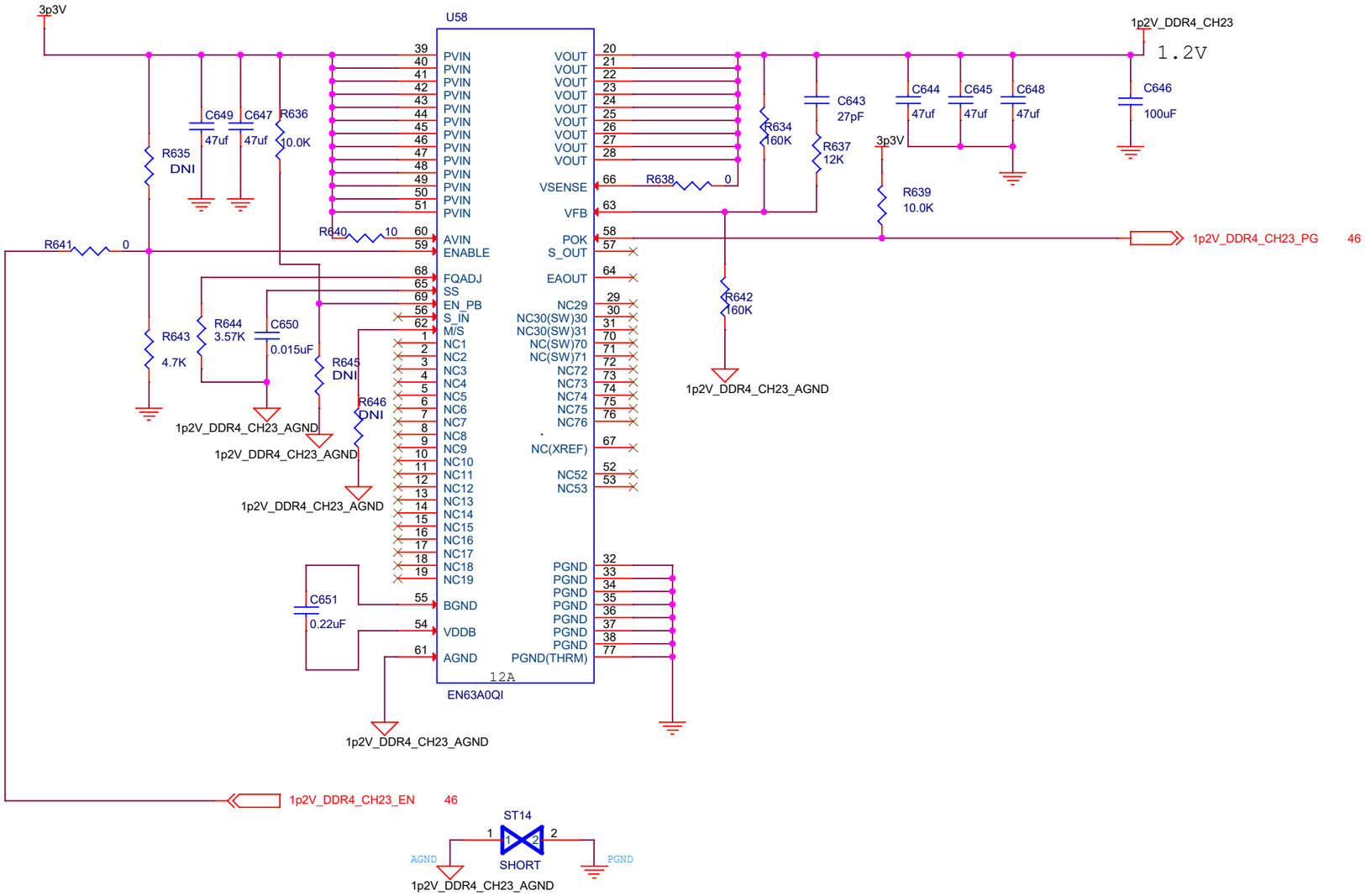

Intel Corporation,101 innovation Dr, San Jose, CA 95134

Title: AgileX F-Series FPGA Dev Kit_Enpirion

Copyright (c) 2014, Intel Corporation. All Rights Reserved.

Size	Document Number	Rev
B	K57065-001-A	A0

Date: Friday, January 10, 2020 Sheet 61 of 66

PWR - DDR4 VREF/VTT

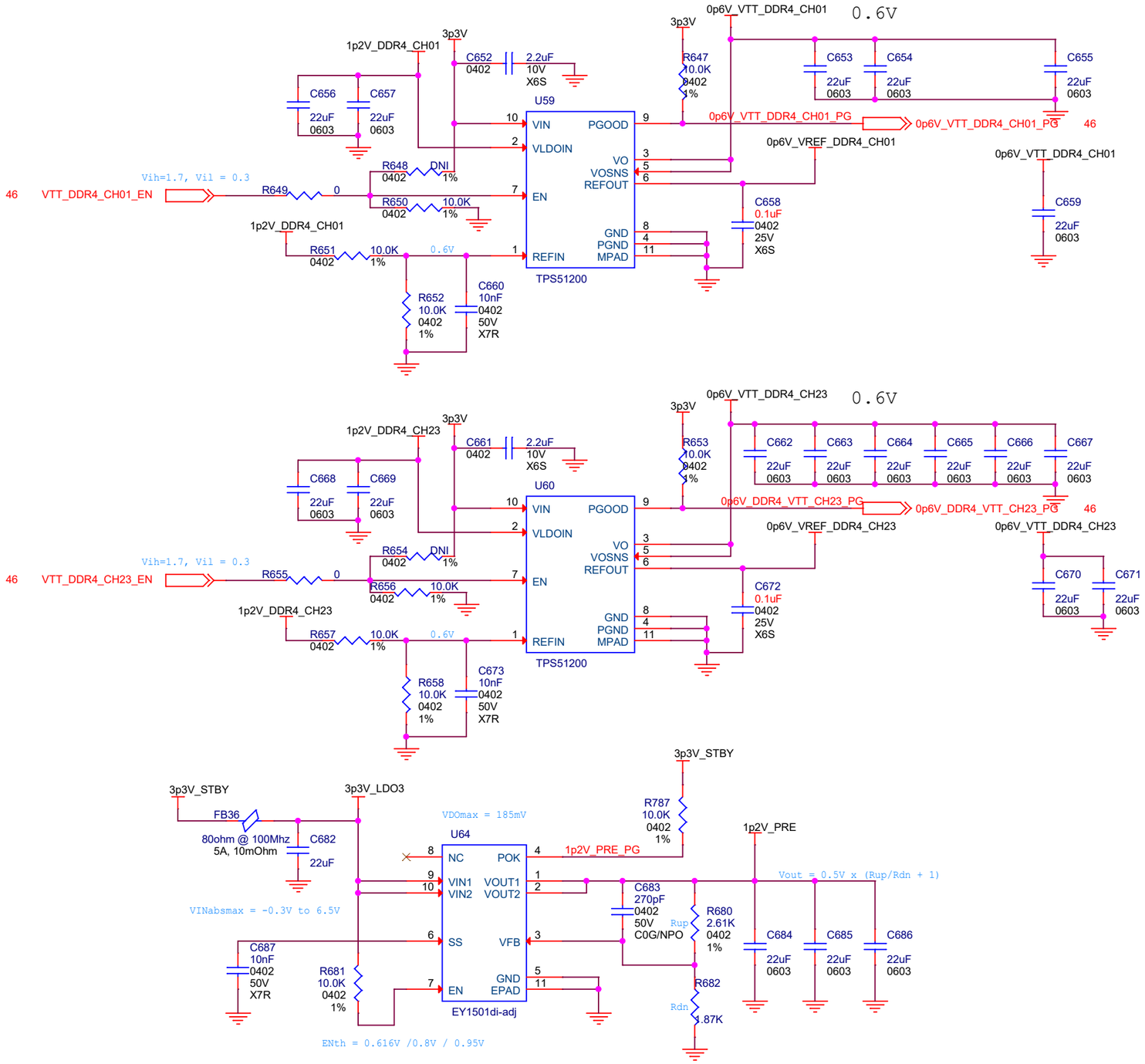

Intel Corporation,101 innovation Dr, San Jose, CA 95134

Title: AgileX F-Series FPGA Dev Kit_Enpirion

Copyright (c) 2014, Intel Corporation. All Rights Reserved.

Size	Document Number	Rev
B	K57065-001-A	A0

Date: Friday, January 10, 2020 Sheet 62 of 66

PWR - 2p5V

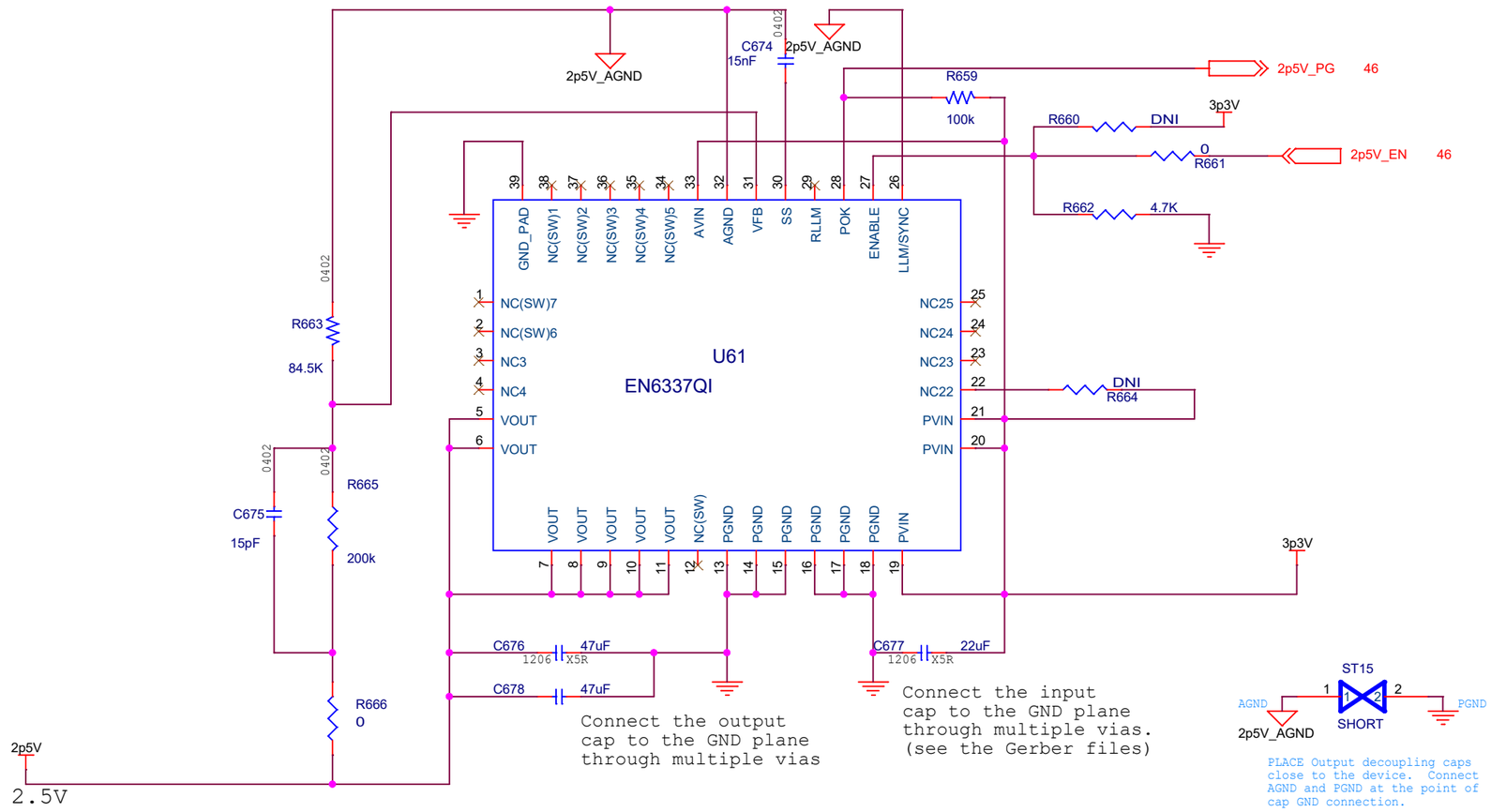

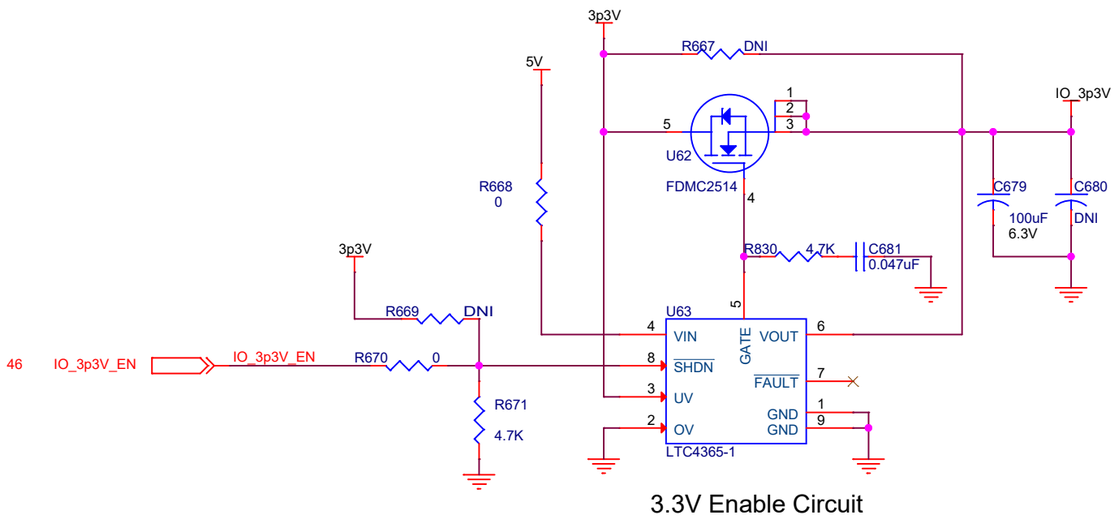

3.3V Enable Circuit

Intel Corporation,101 innovation Dr, San Jose, CA 95134

Title: AgileX F-Series FPGA Dev Kit_Enpirion

Copyright (c) 2014, Intel Corporation. All Rights Reserved.

Size	Document Number	Rev
B	K57065-001-A	A0

Date: Friday, January 10, 2020 Sheet 63 of 66

PWR - 1p1V VCCH_GXER1 VCCFUSEWR_SDM

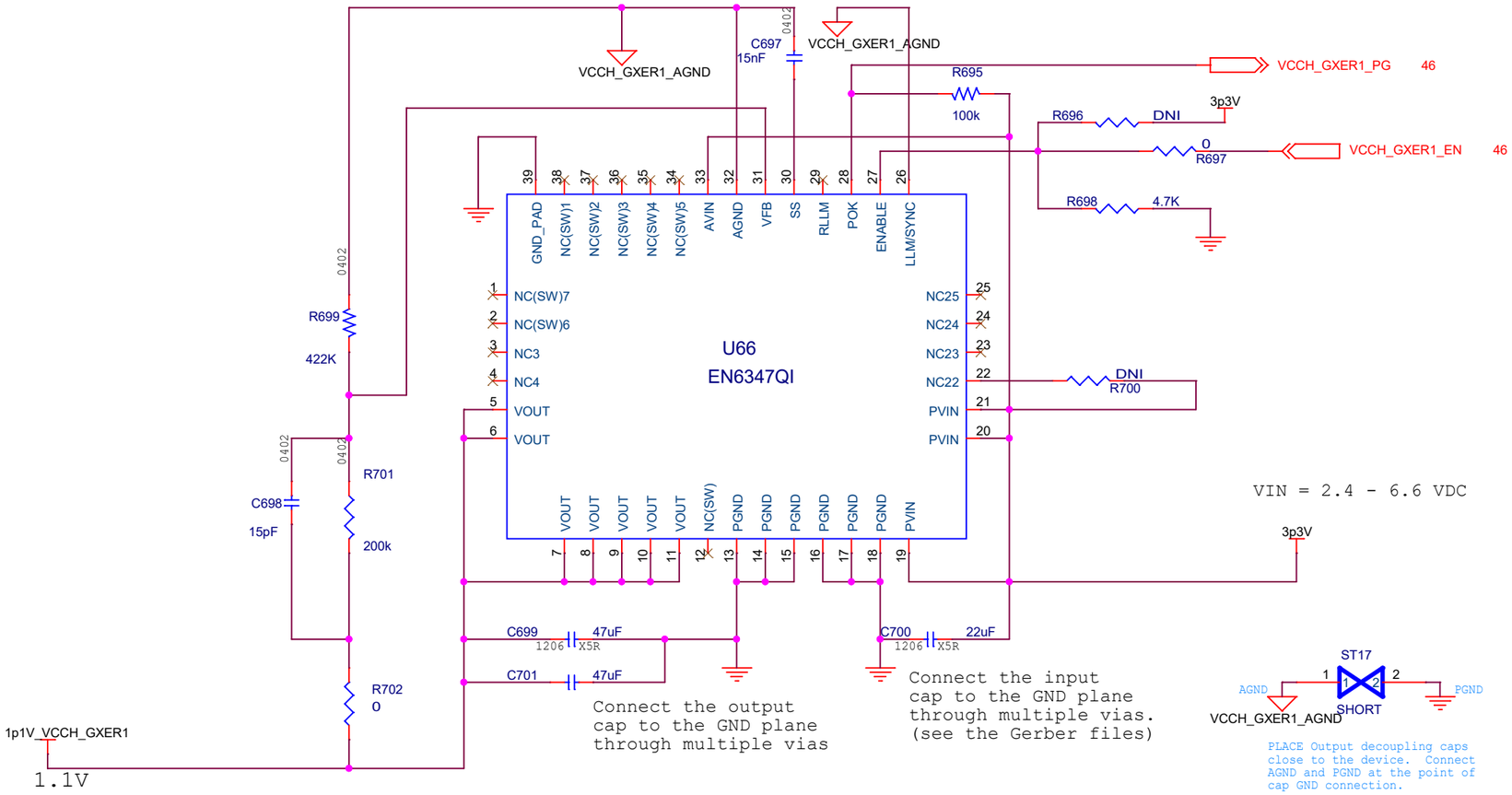

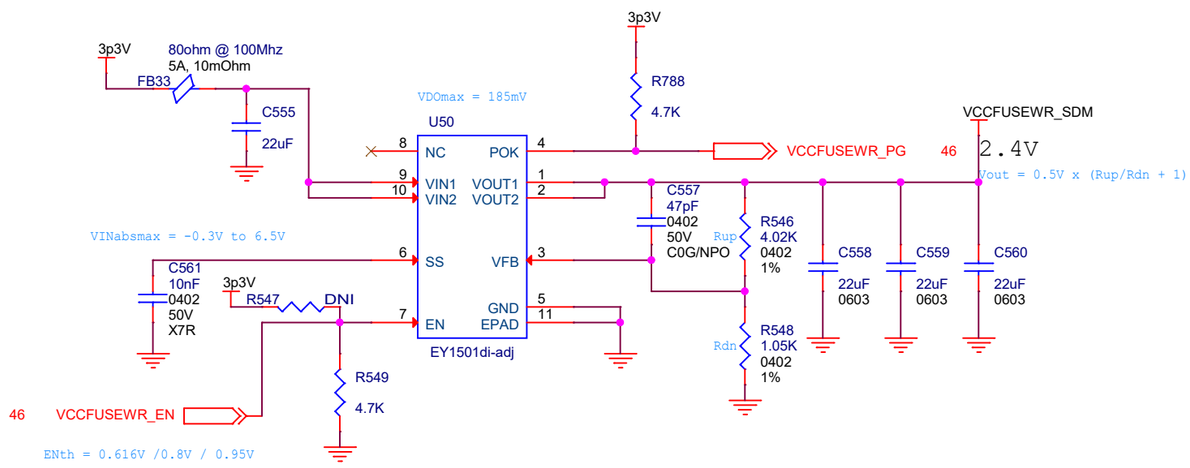

Intel Corporation,101 innovation Dr, San Jose, CA 95134

Title: AgileX F-Series FPGA Dev Kit_Enpirion

Copyright (c) 2014, Intel Corporation. All Rights Reserved.

Size	Document Number	Rev
B	K57065-001-A	A0

Date: Friday, January 10, 2020 Sheet 64 of 66

Decoupling - page 1

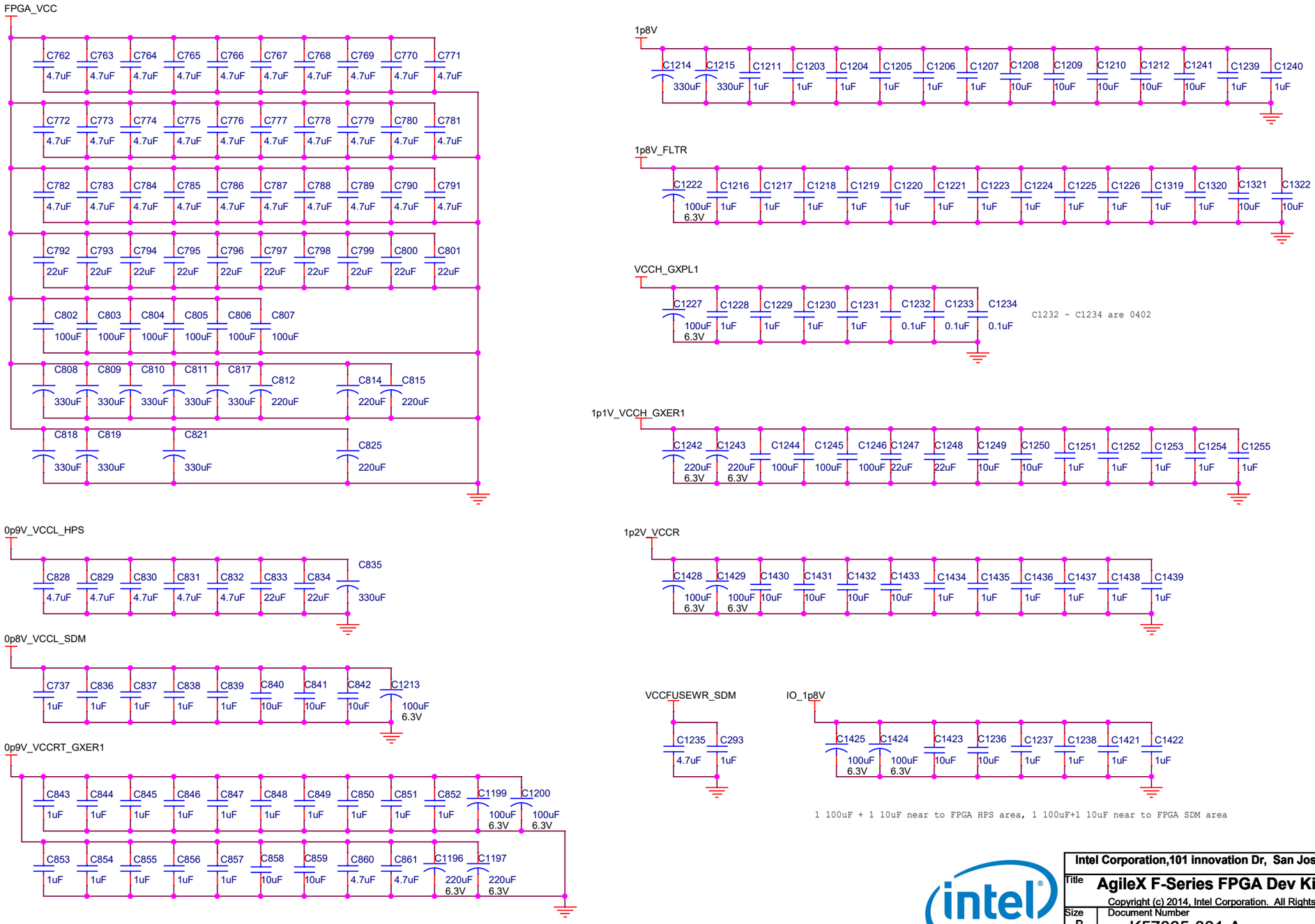

1 100uF + 1 10uF near to FPGA HPS area, 1 100uF+1 10uF near to FPGA SDM area

Intel Corporation,101 innovation Dr, San Jose, CA 95134

Title: AgileX F-Series FPGA Dev Kit_Enpirion

Copyright (c) 2014, Intel Corporation. All Rights Reserved.

Size	Document Number	Rev
B	K57065-001-A	A0

Date: Friday, January 10, 2020 Sheet 65 of 66

Decoupling - page 2

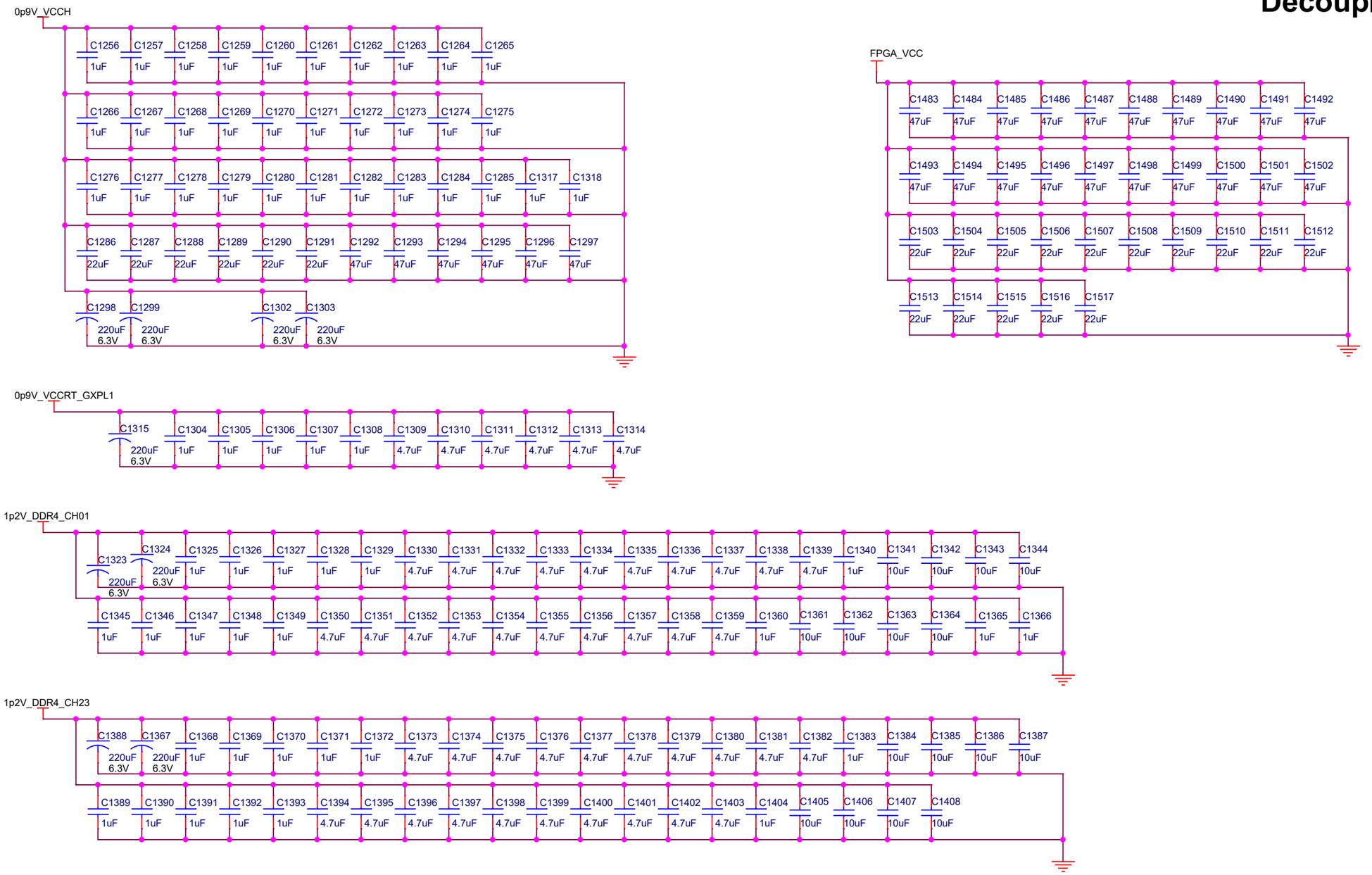

Intel Corporation,101 innovation Dr, San Jose, CA 95134

Title: **AgileX F-Series FPGA Dev Kit_Enpirion**

Copyright (c) 2014, Intel Corporation. All Rights Reserved.

Size	Document Number	Rev
B	K57065-001-A	A0

Date: Friday, January 10, 2020 Sheet 66 of 66